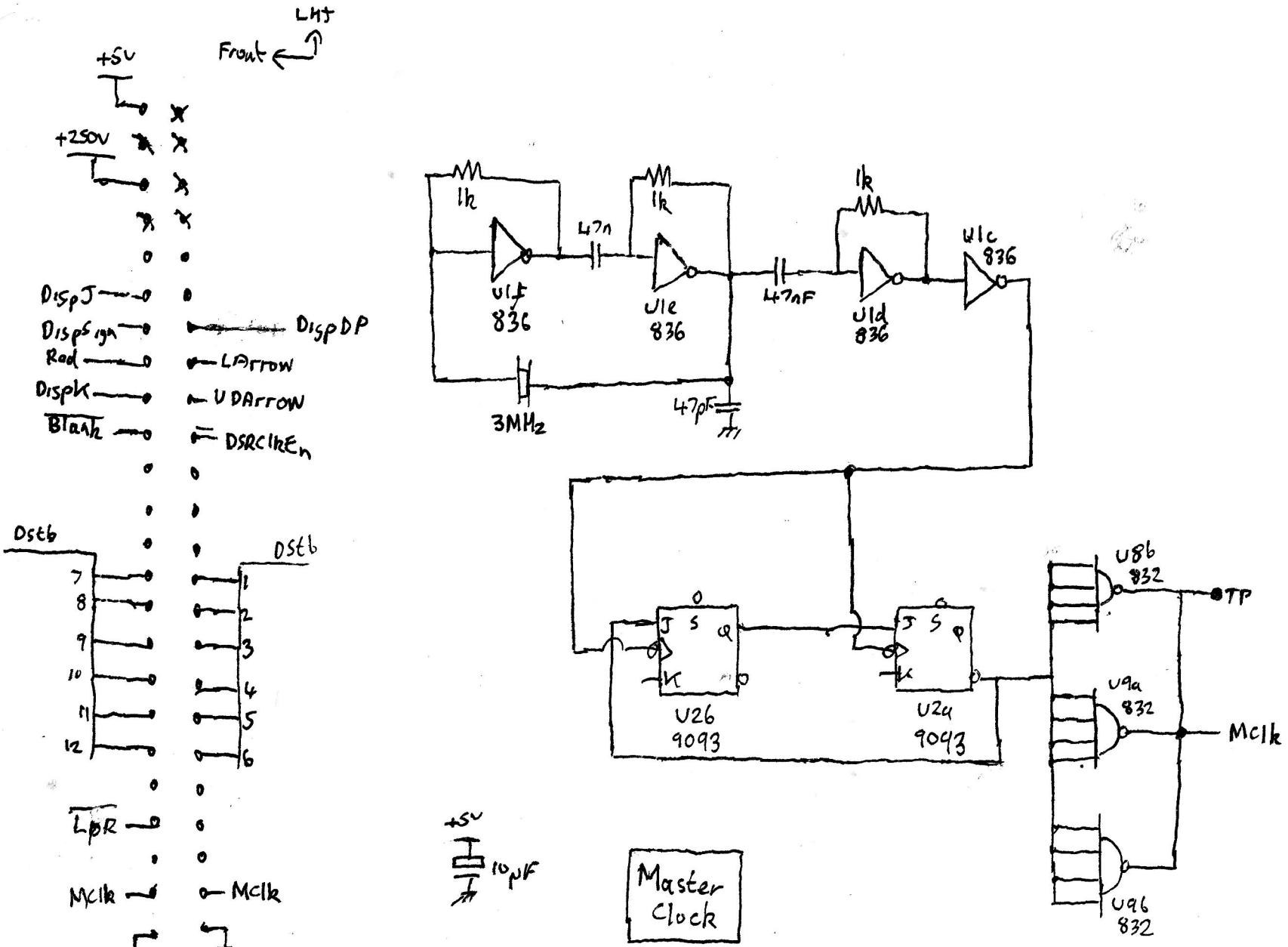

Olympia ICR 412 PCB 1 Sheet (1)

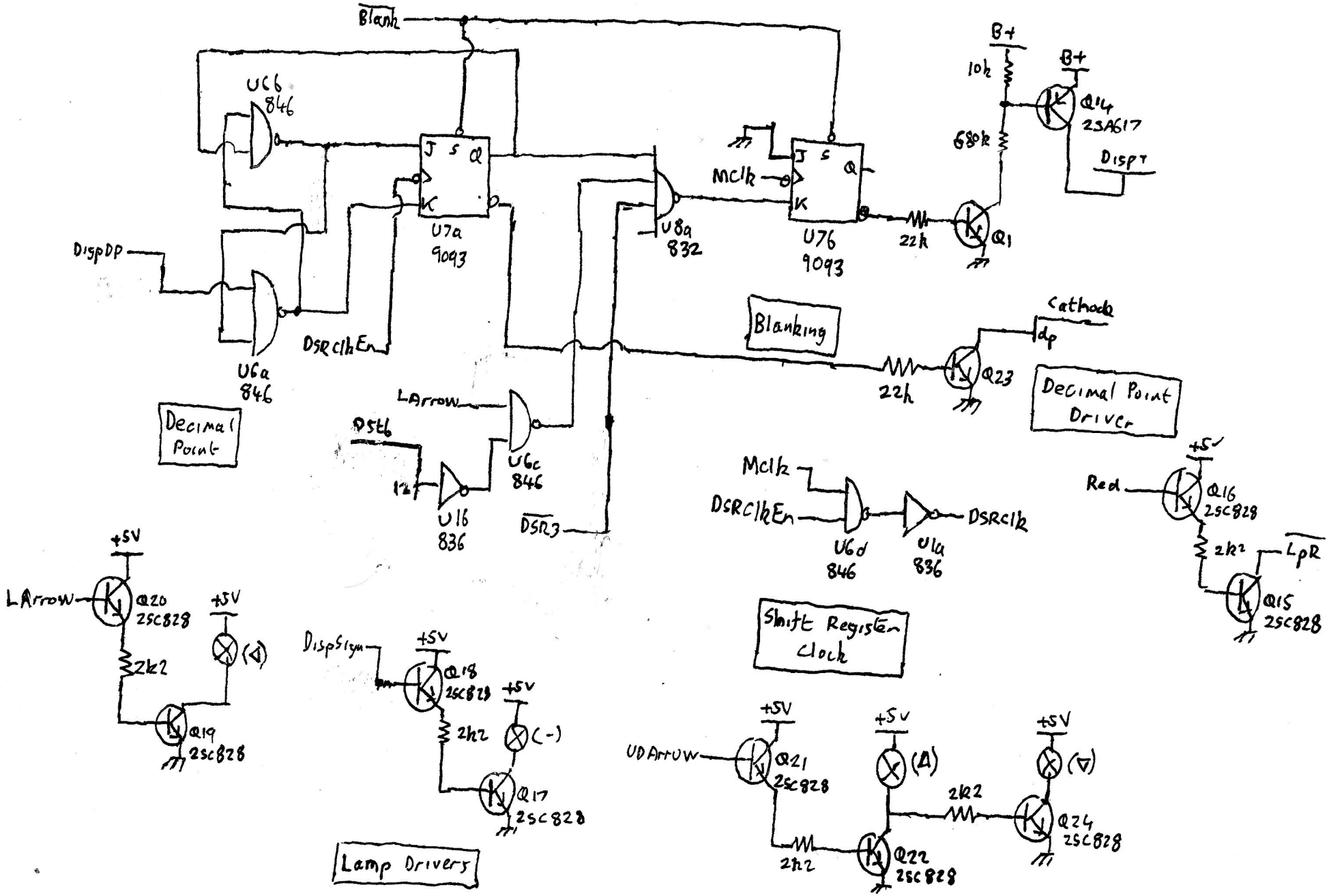

Olympia ICR412 PCB1 Sheet (2)

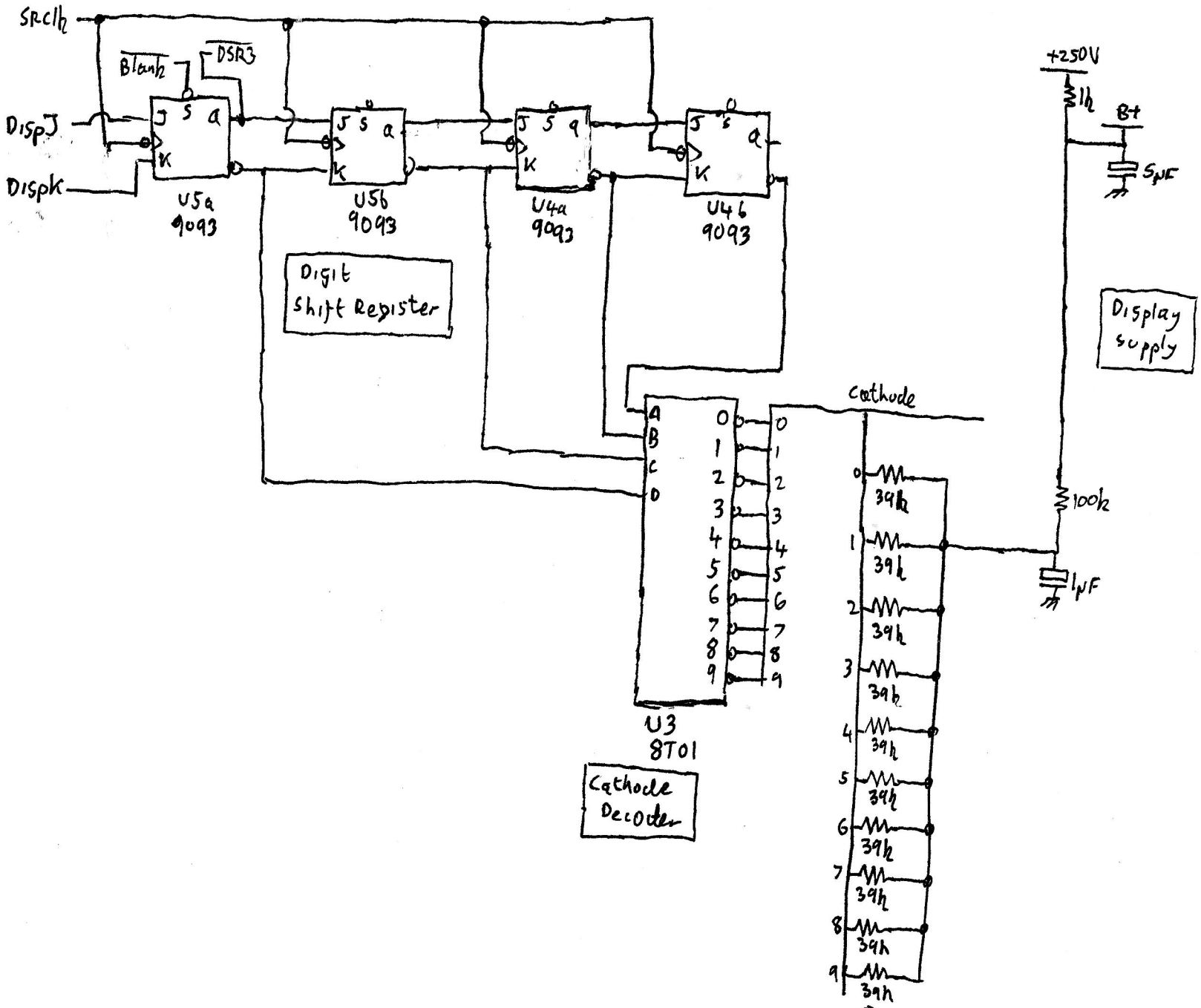

Olympia ICR412 PCB 1 Sheet 3

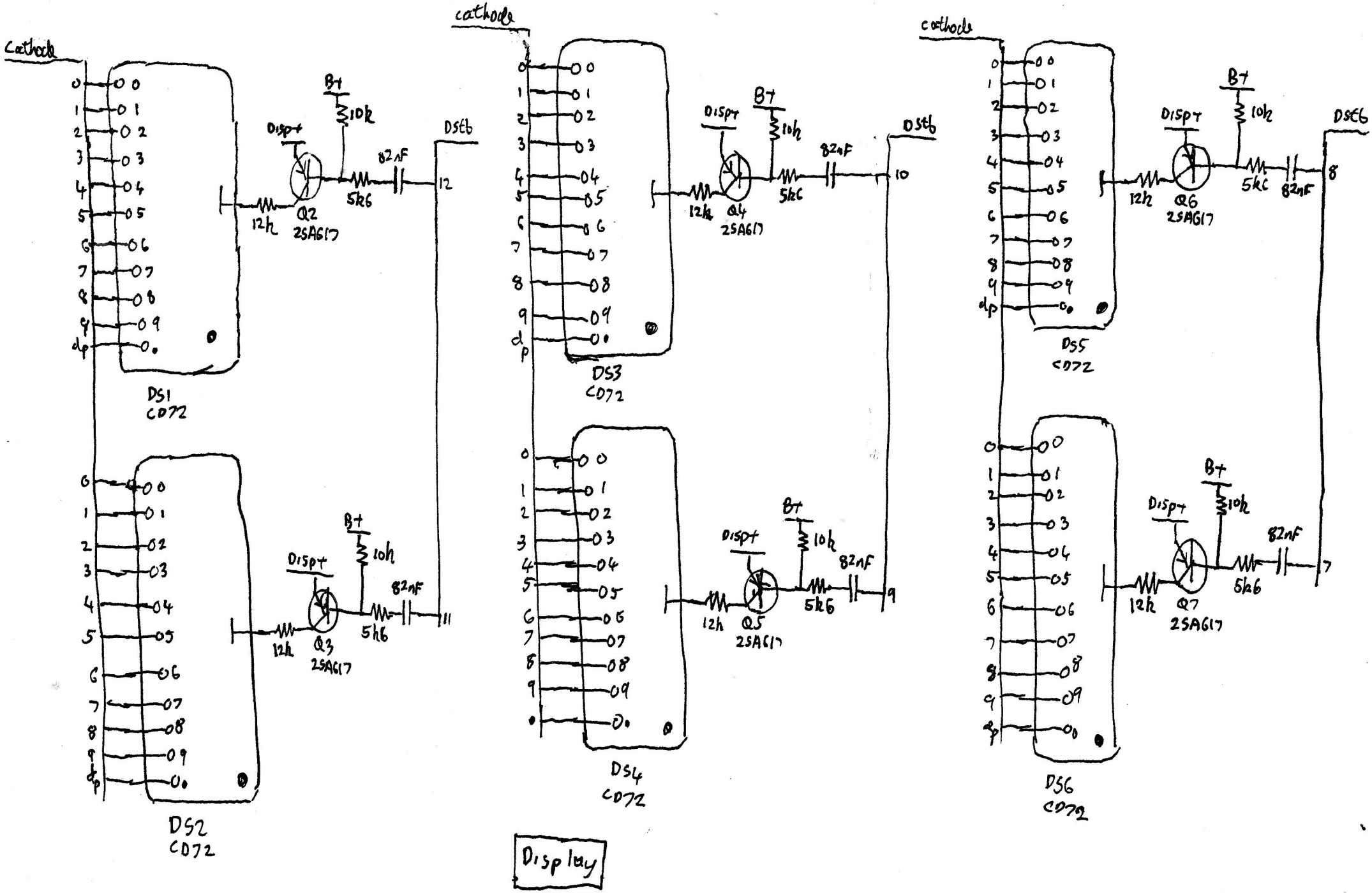

Olympia ICR412 PCB 1 Sheet (4)

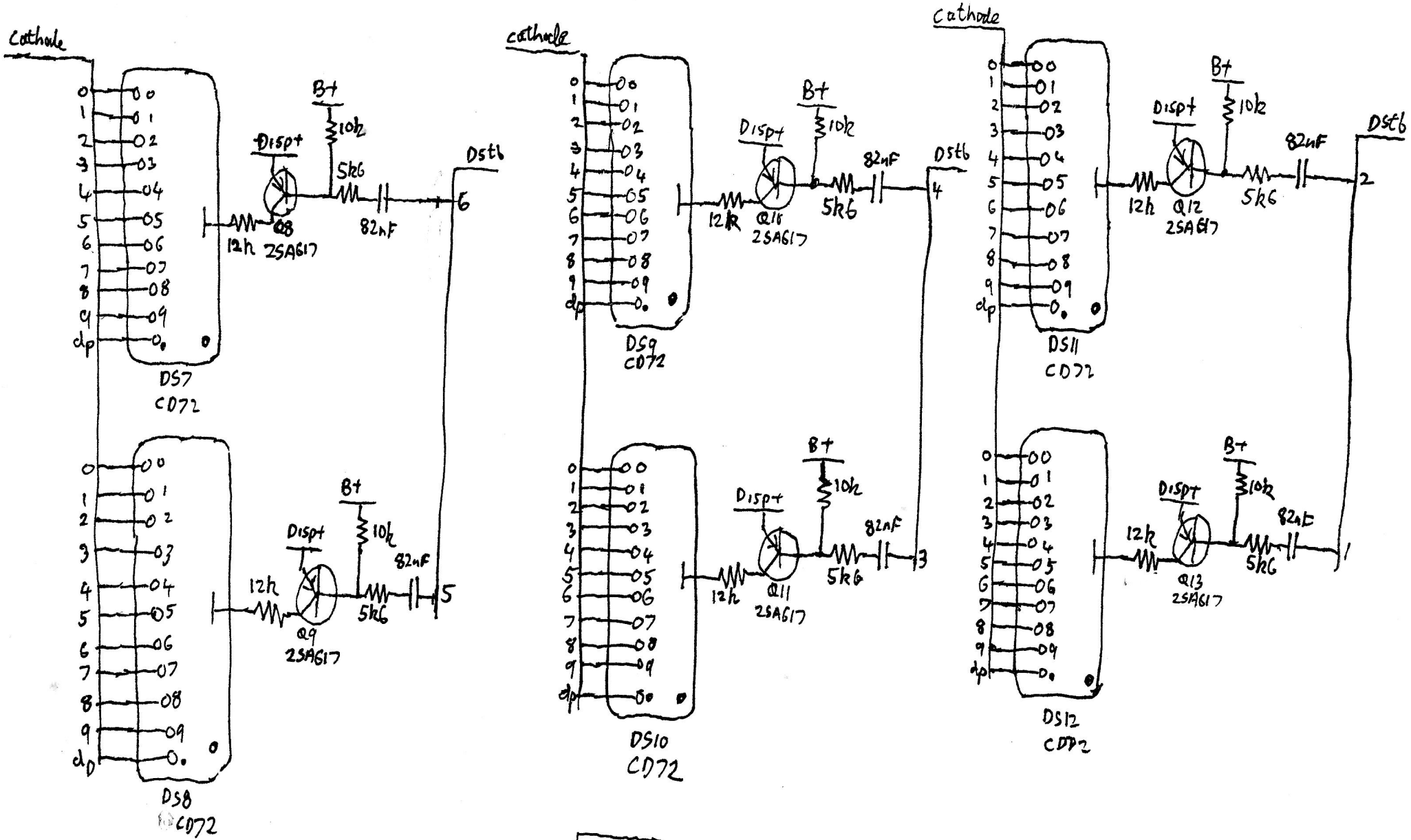

Olympia ICR412 PCB1 Sheet 5

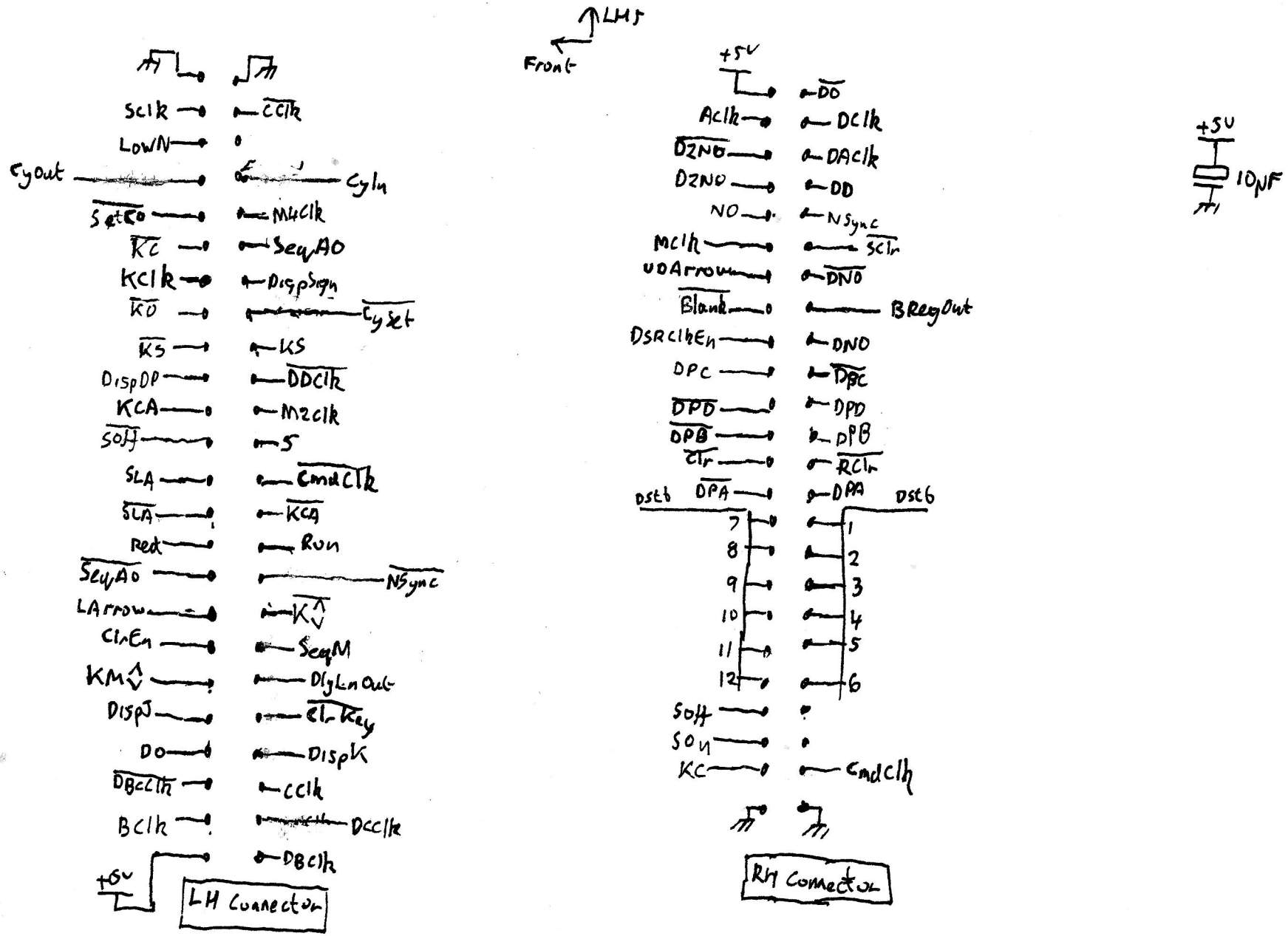

Olympia ICR412 PCB 2 Sheet (1)

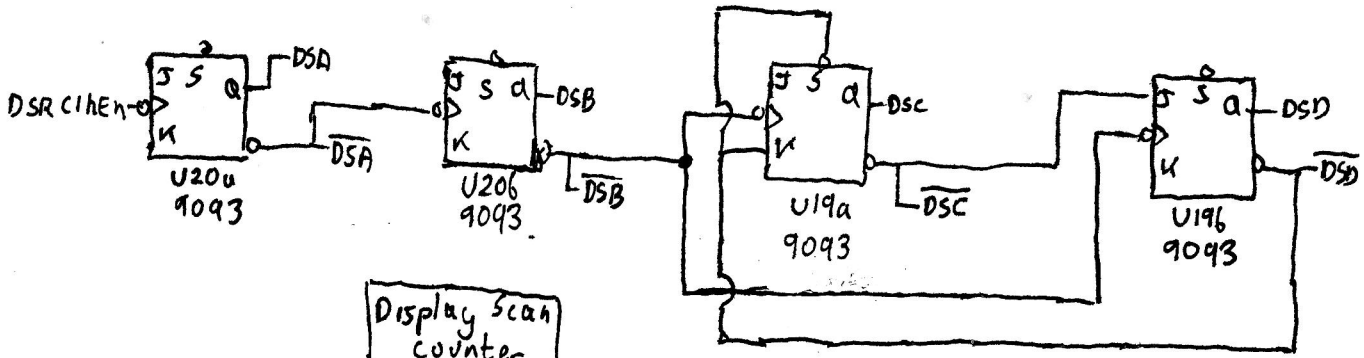

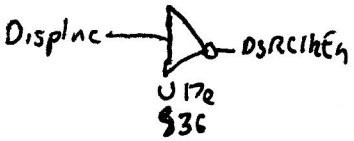

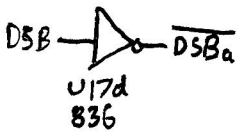

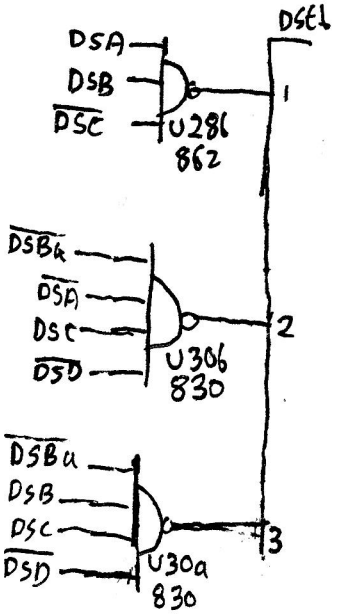

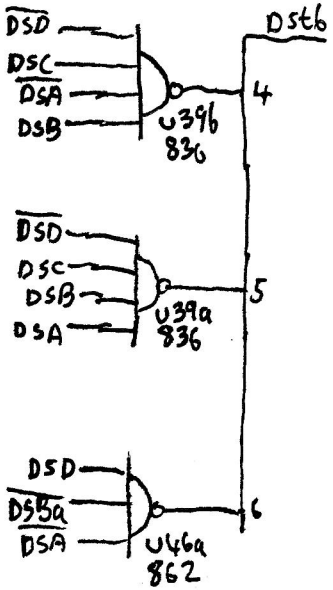

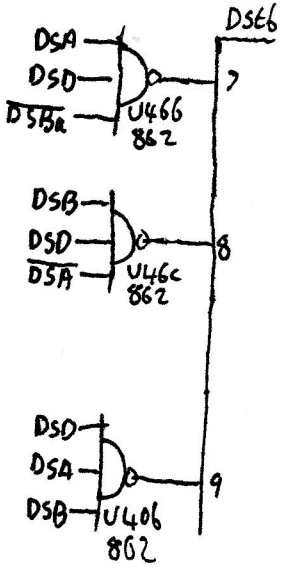

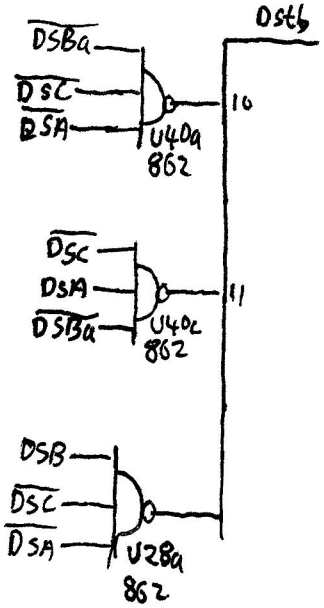

Display Scan Decoder

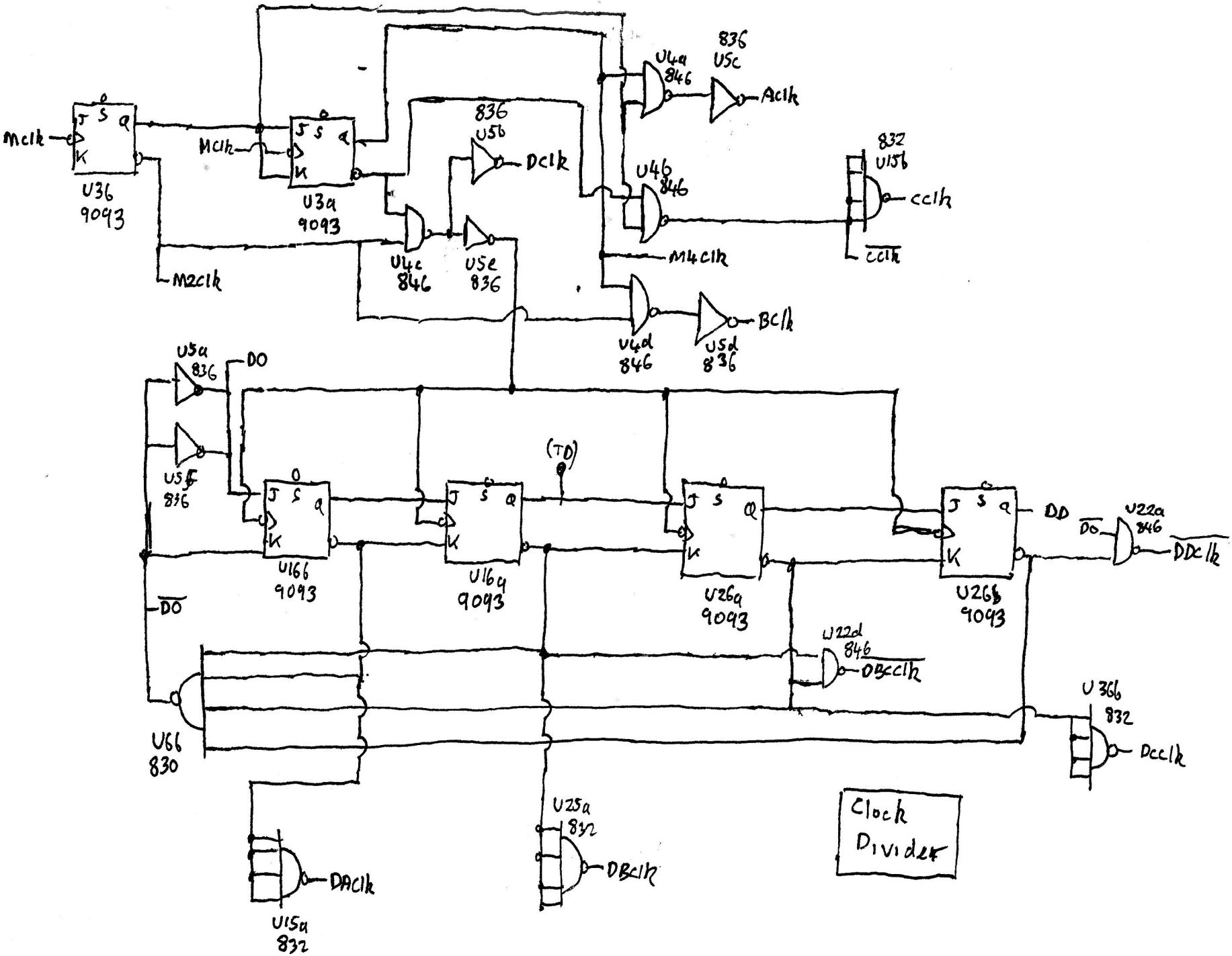

Olympia ICR 412 PCB2 Sheet (3)

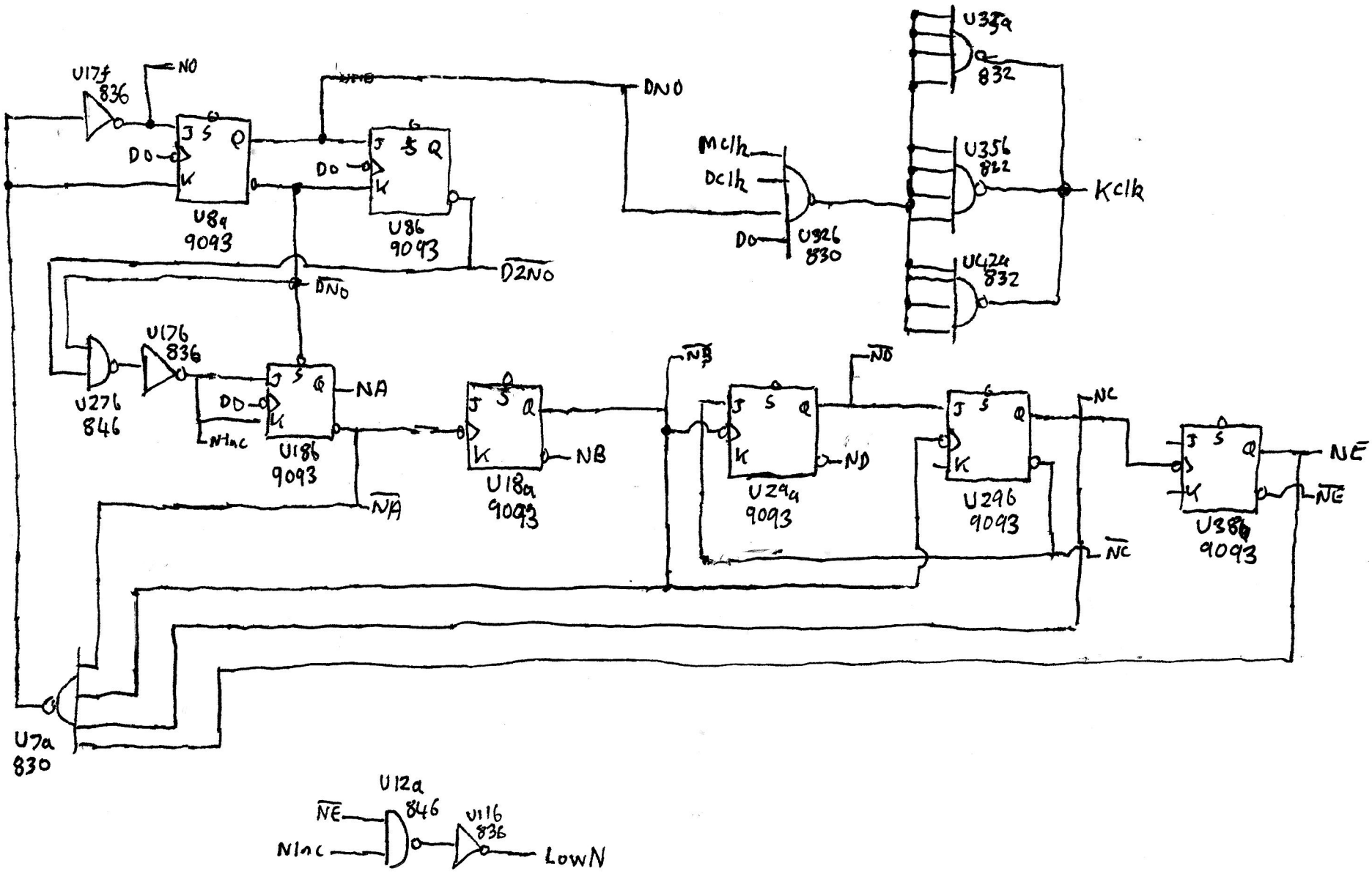
U17f
836
N0
U8a
9093
U8b
9093
DN0
D2N0
Mclk
Dclk
D0
U32a
832
U35b
832
U42a
832
Kclk
U926
830
DN0
U27b
846
U17b
836
U18b
9093
NA
N1nc
NA
U18a
9093
NB
NB
U29a
9093
ND
ND
U29b
9093
NC
NC
U38b
9093
NE
NE
U7a
830
U12a
846
U11b
836
NE
N1nc
LowN

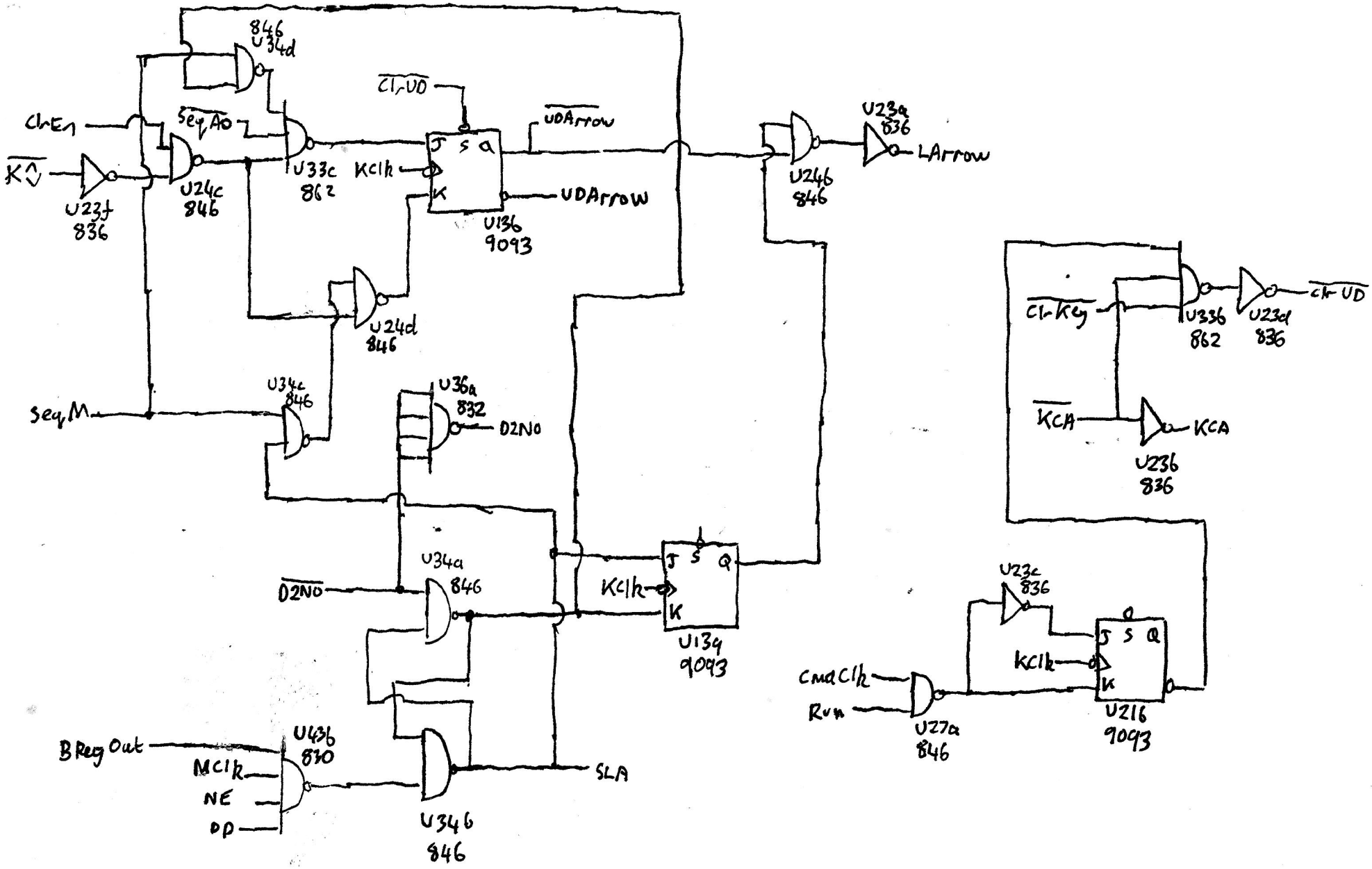

Olympia ICR412 PCB2 Sheet (5)

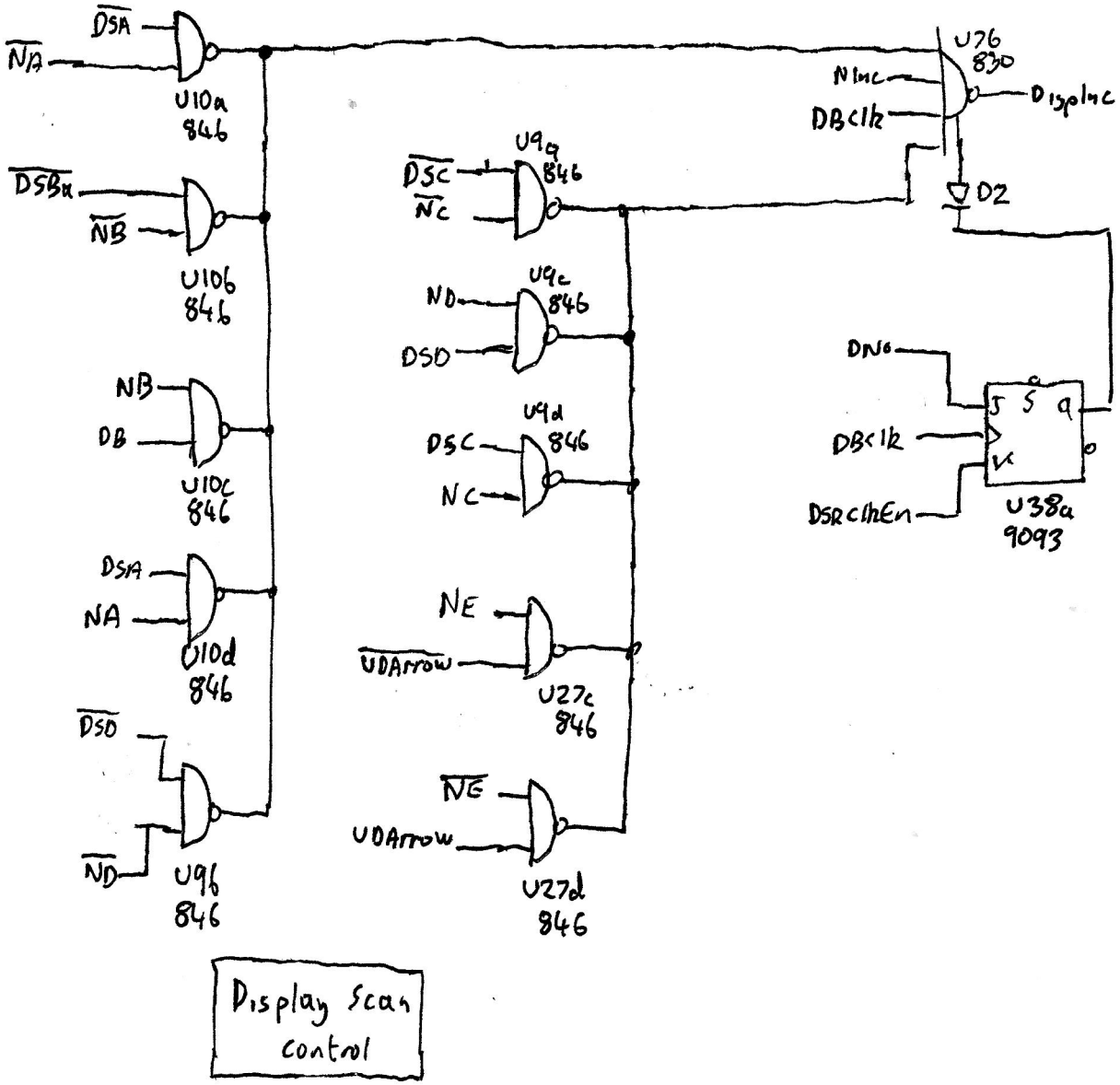
DSA
NA
U10a
846
DSB
NB
U10b
846
NB
DB
U10c
846
DSA
NA
U10d
846
DSD
ND
U9b
846
U9a
846
DSC
NC
U9c
846
ND
DSD
U9d
846
DSC
NC
NE
UDArrow
U27c
846
NE
UDArrow
U27d
846
U76
830
NInc
DBClk
DispInc
D2
DNo
DBClk
DSRClkEn
U38a
9093
Display Scan control

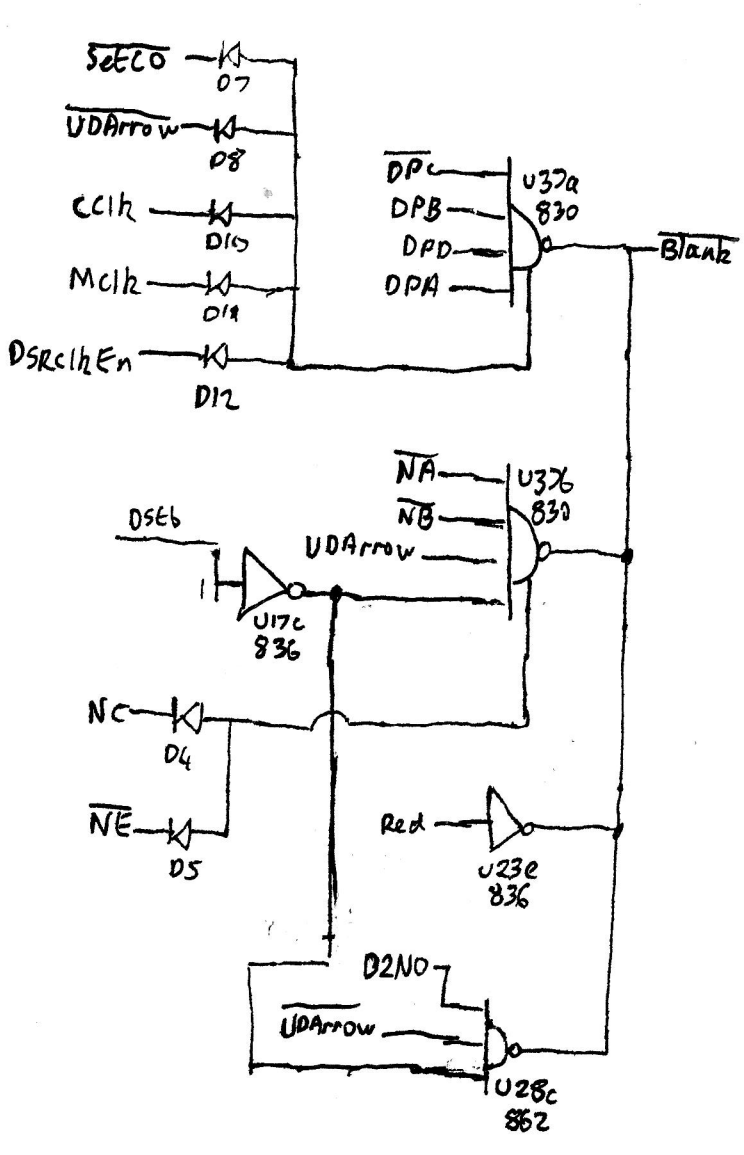
SelCO
D7
UDArrow
D8
CClk
D10
MClk
D11
DSRClkEn
D12
DPC
DPB
DPD
DPA
U37a
830
Blank
NA
NB
UDArrow
U37b
830
DSEb
U17c
836
NC
D4
NE
D5
Red
U23e
836
D2NO
UDArrow
U28c
862
Blanking control

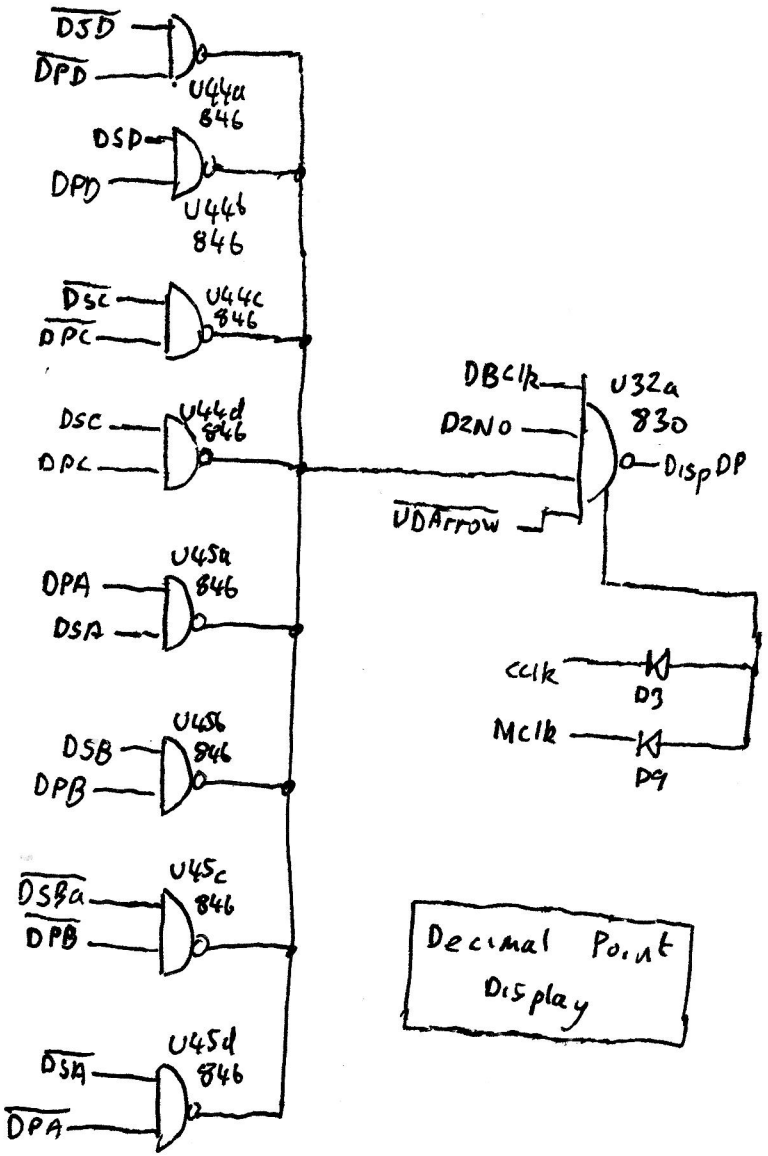
DSD
DPD
U44a
846
DSP
DPD
U44b
846
DSC
DPC
U44c
846
DSC
DPC
U44d
846
DBClk
D2NO
U32a
830
DispDP
UDArrow
DPA
DSA
U45a
846
CClk
D3
MClk
D9
DSB
DPB
U45b
846
DSBa
DPB
U45c
846
DSA
DPA
U45d
846
Decimal Point Display

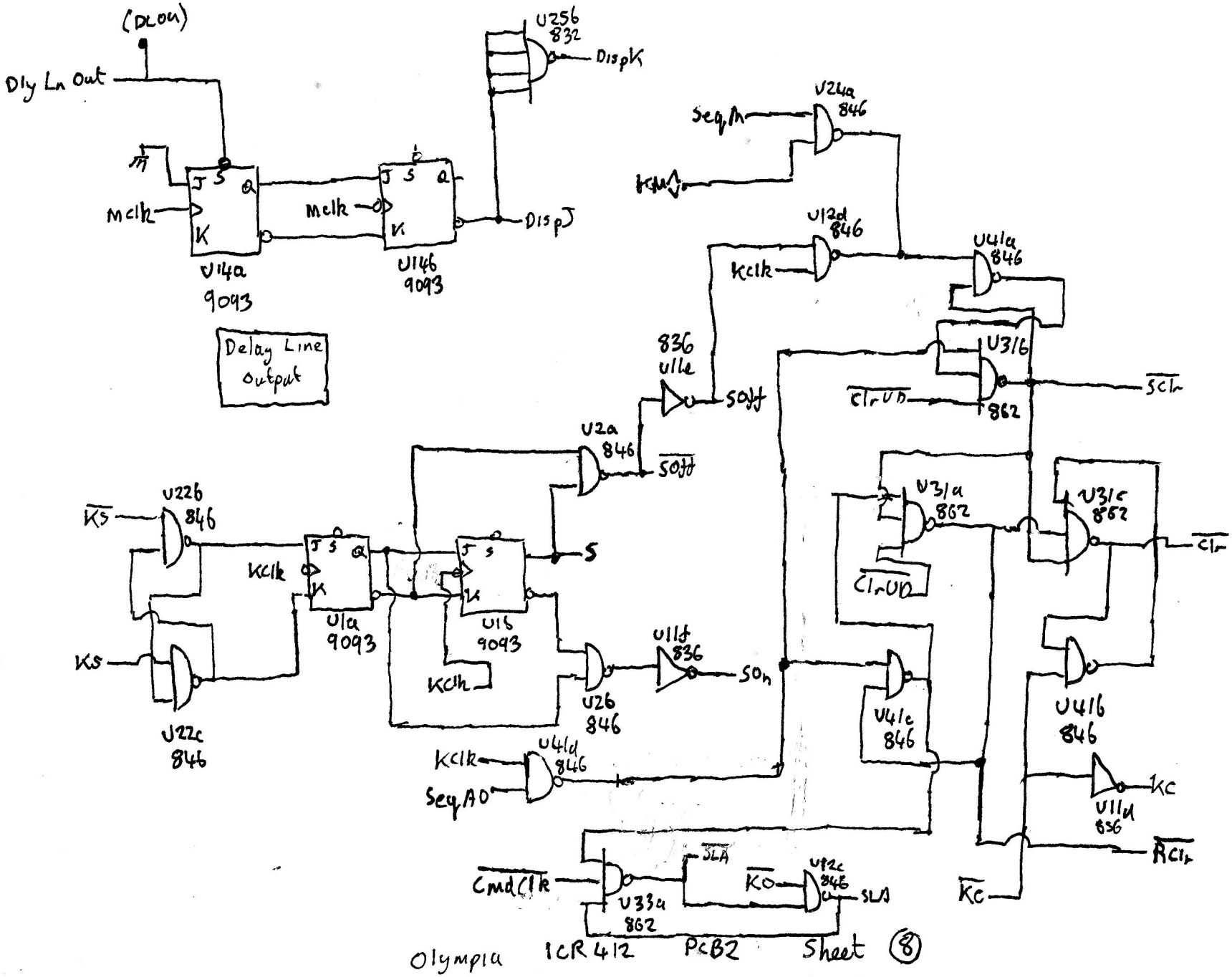

Olympia 1CR 412 PCB2 Sheet (8)

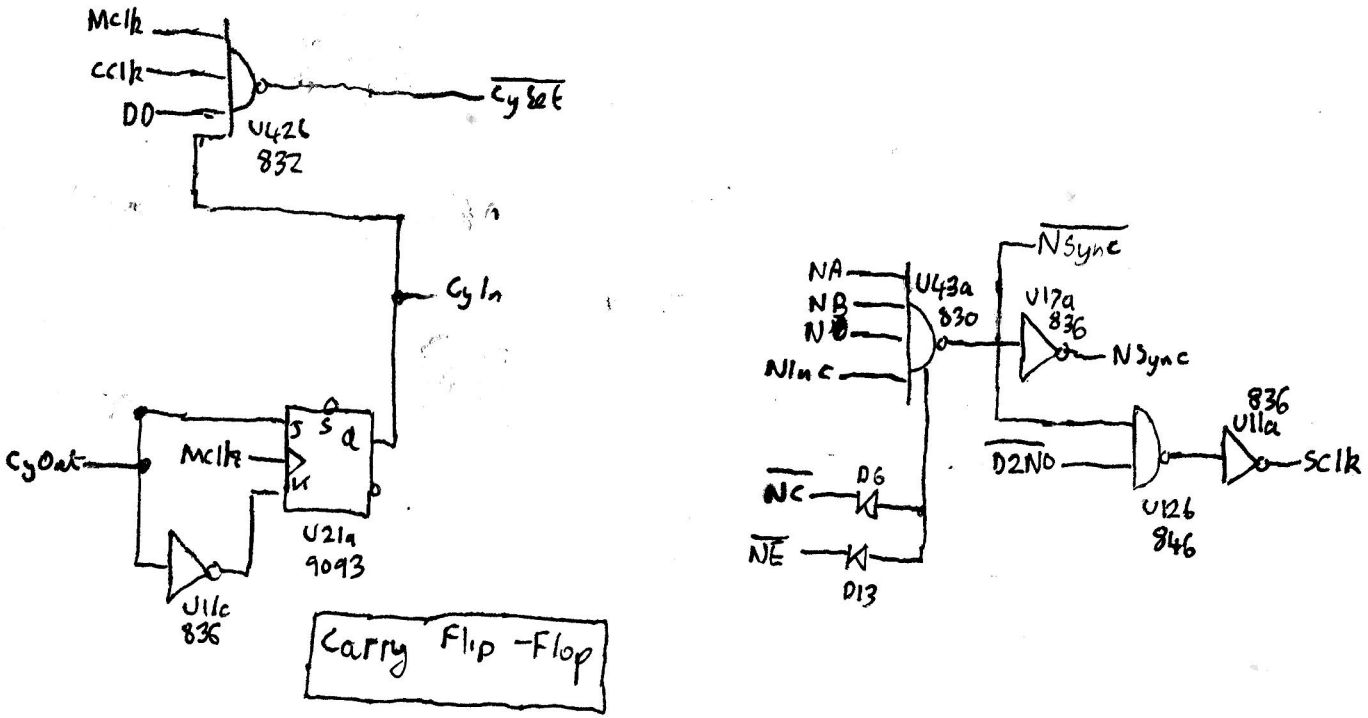

Carry Flip-Flop

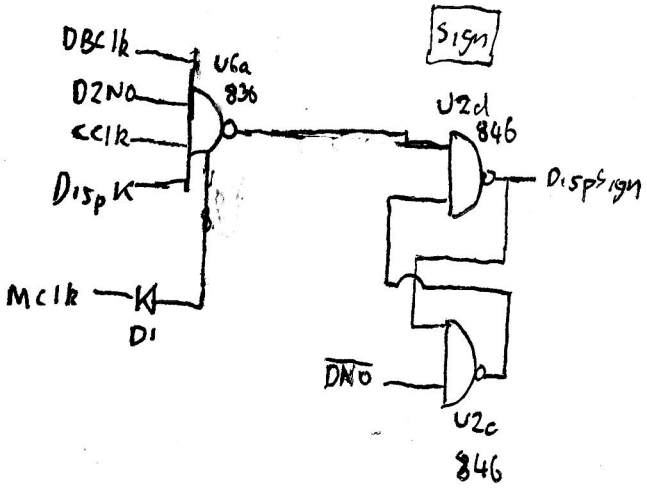

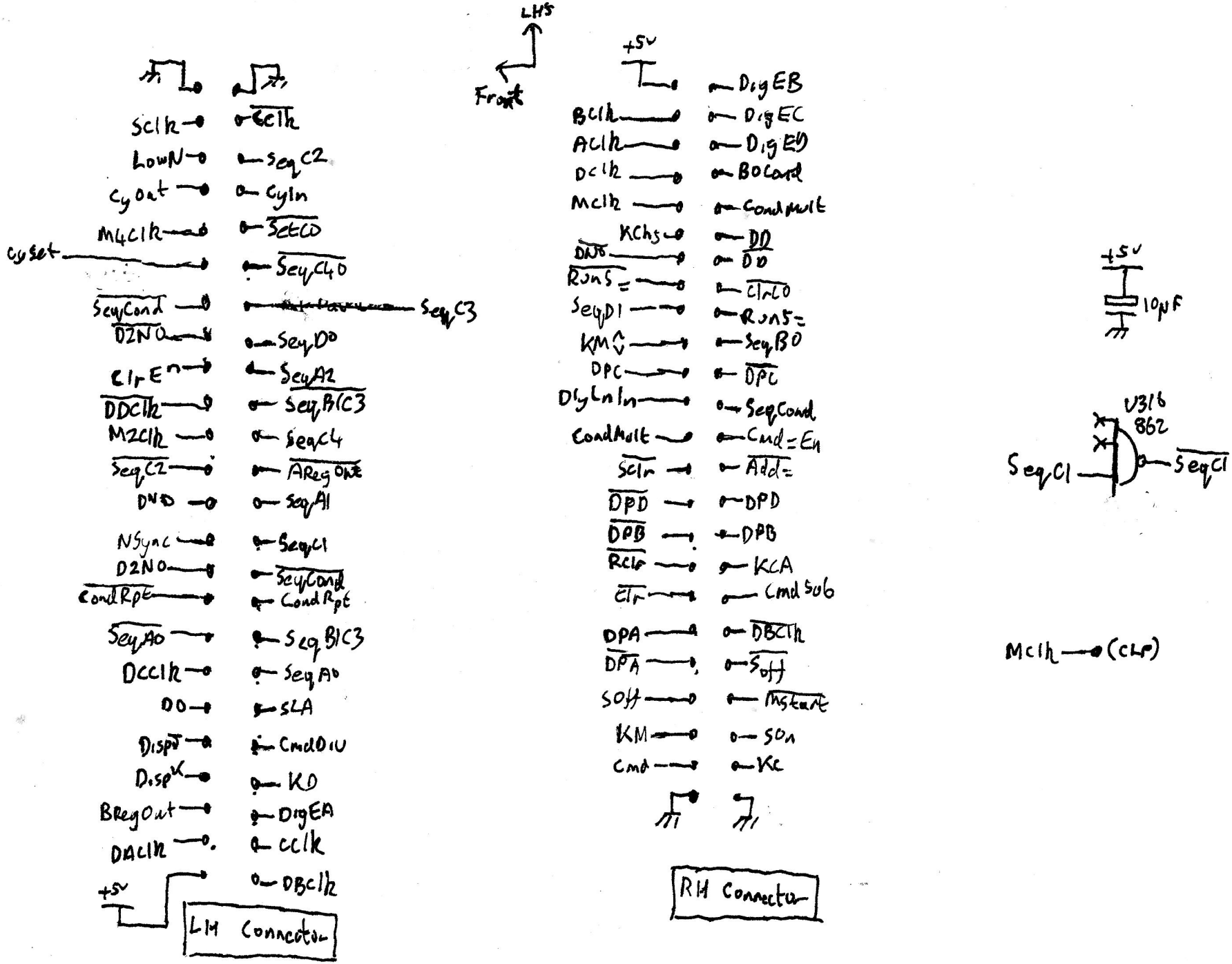

Olympia ICR 412 PCB 3 Sheet (1)

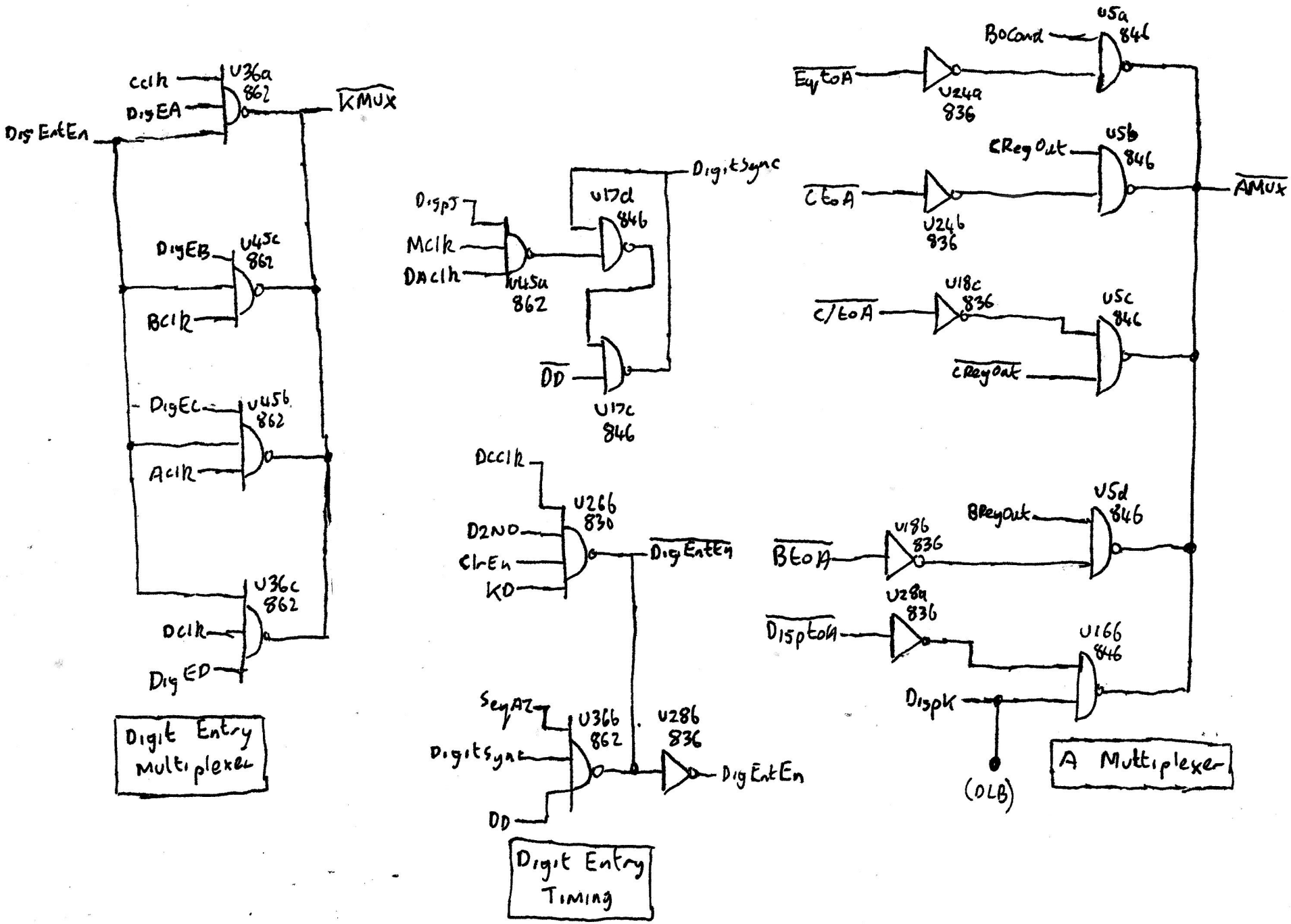

Olympia ICR612 PCB 3 Sheet (2)

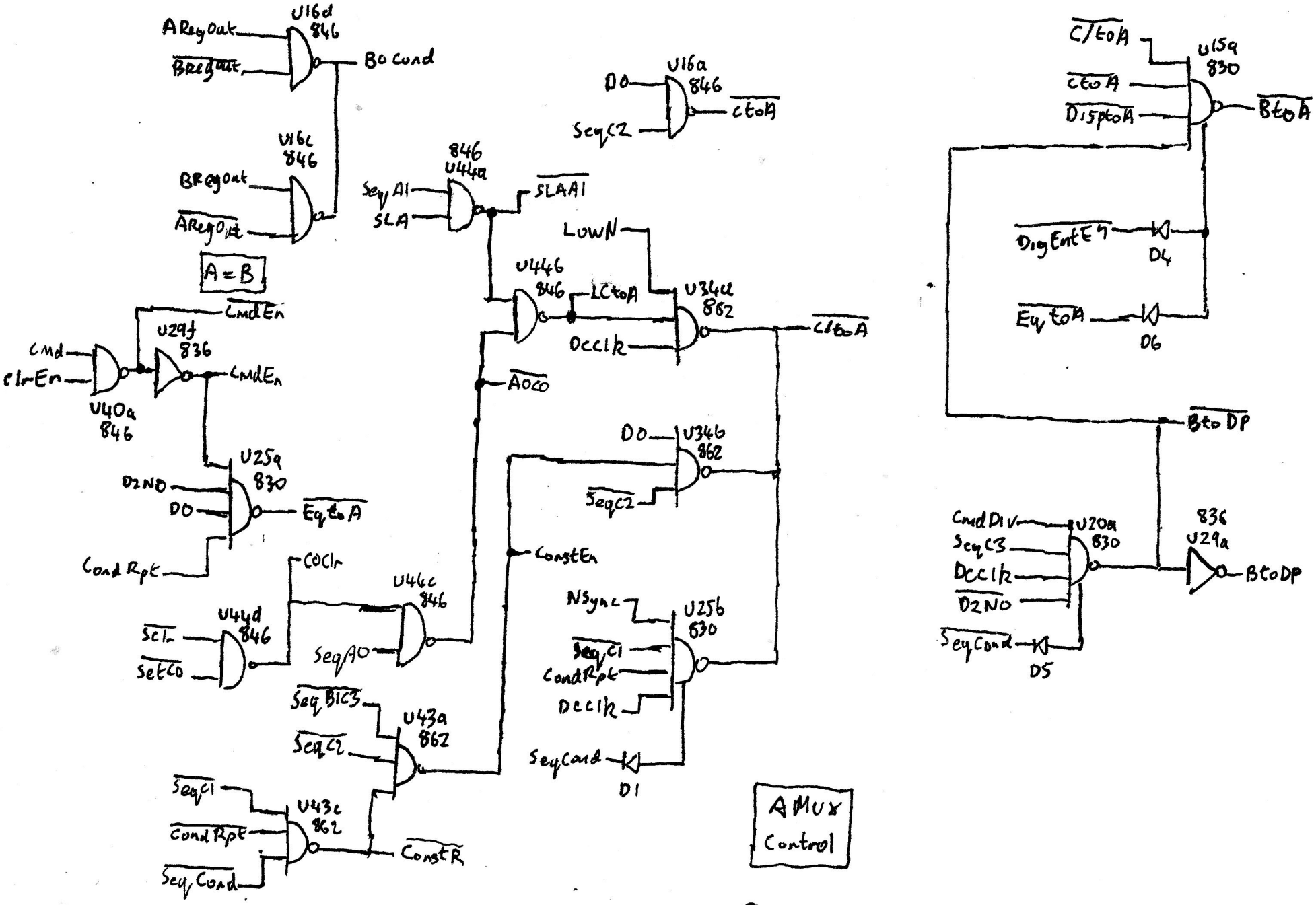

Olympia ICR412 PCB 3 Sheet (3)

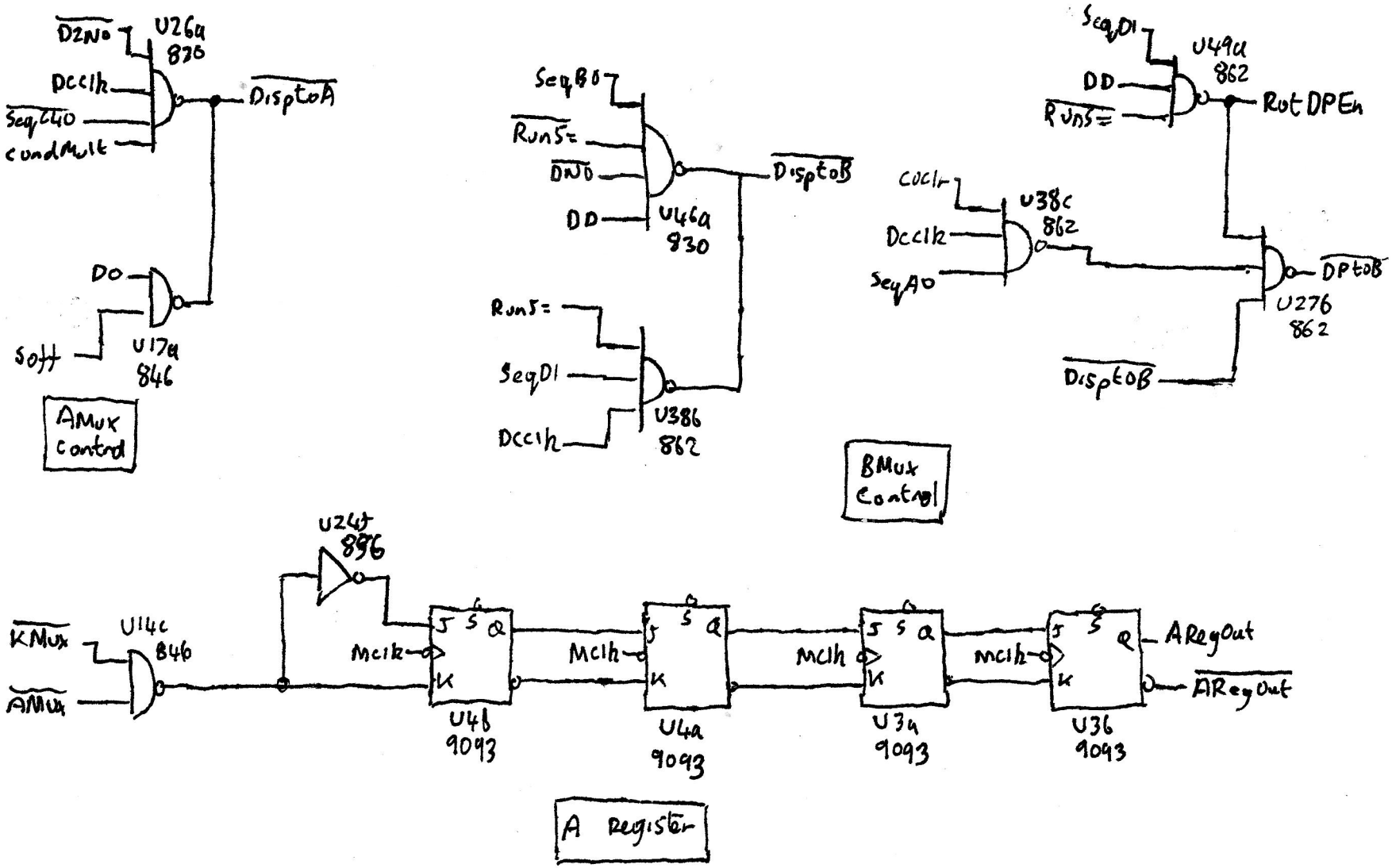

Olympia ICR 4h2 PCB 3 Sheet (4)

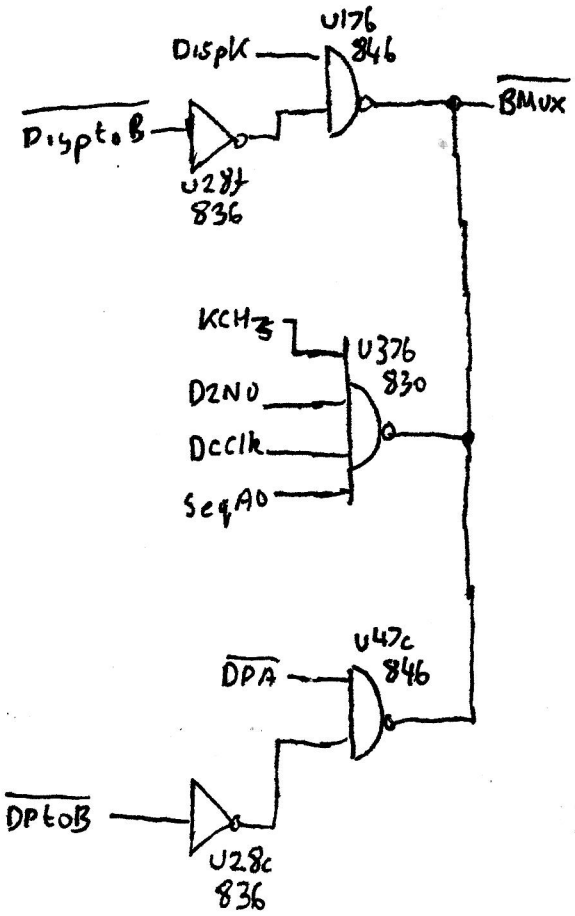

B Multiplexer

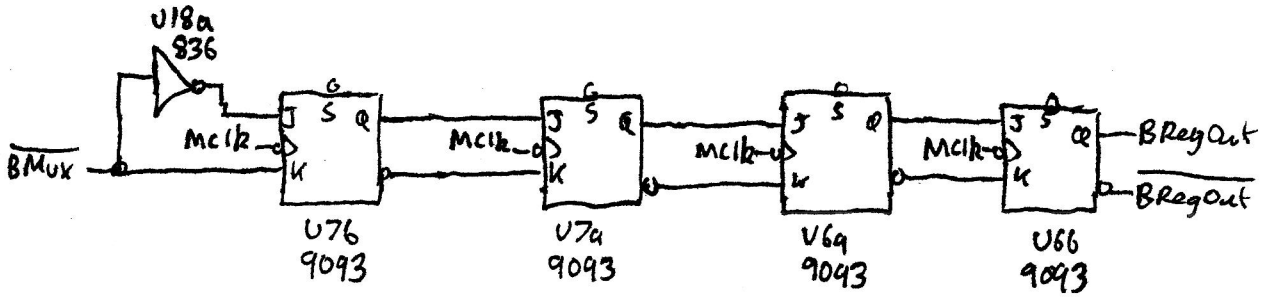

B Register

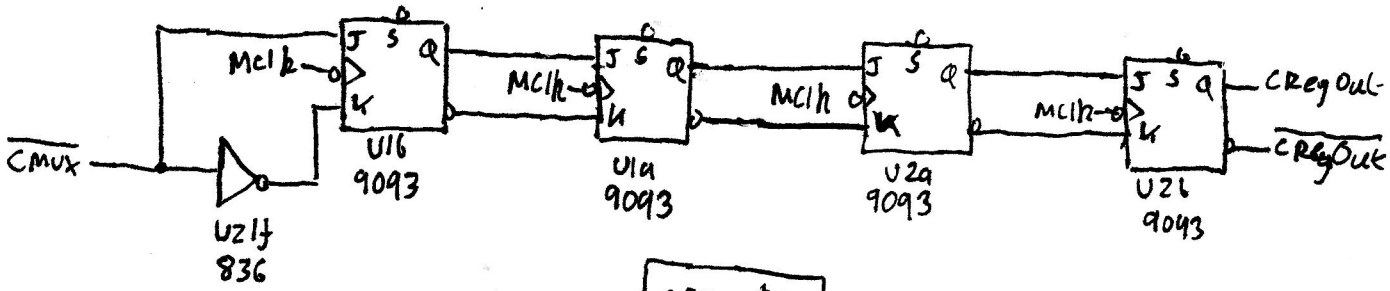

C Register

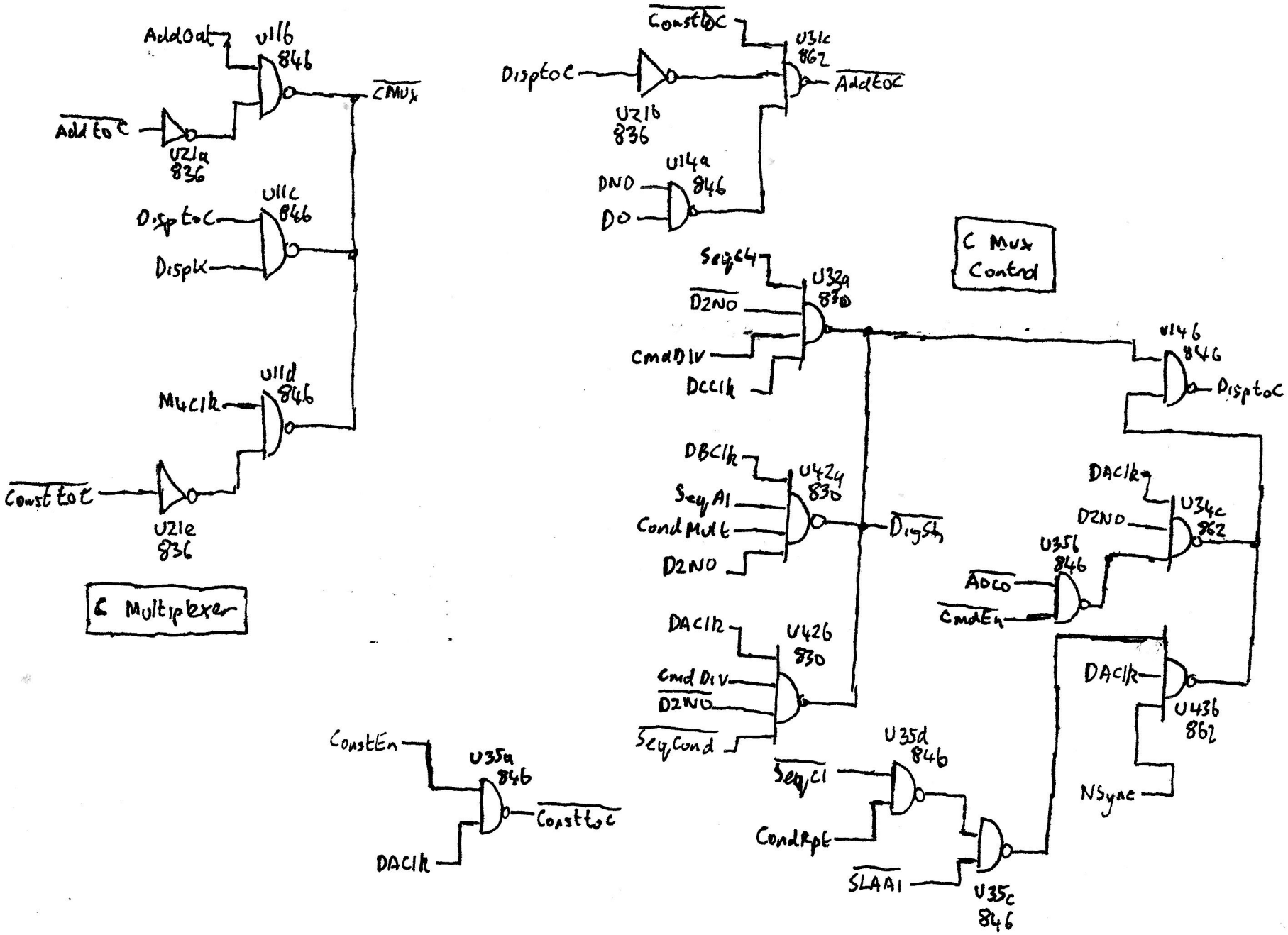

Olympia ICR412 PCB3 Sheet (6)

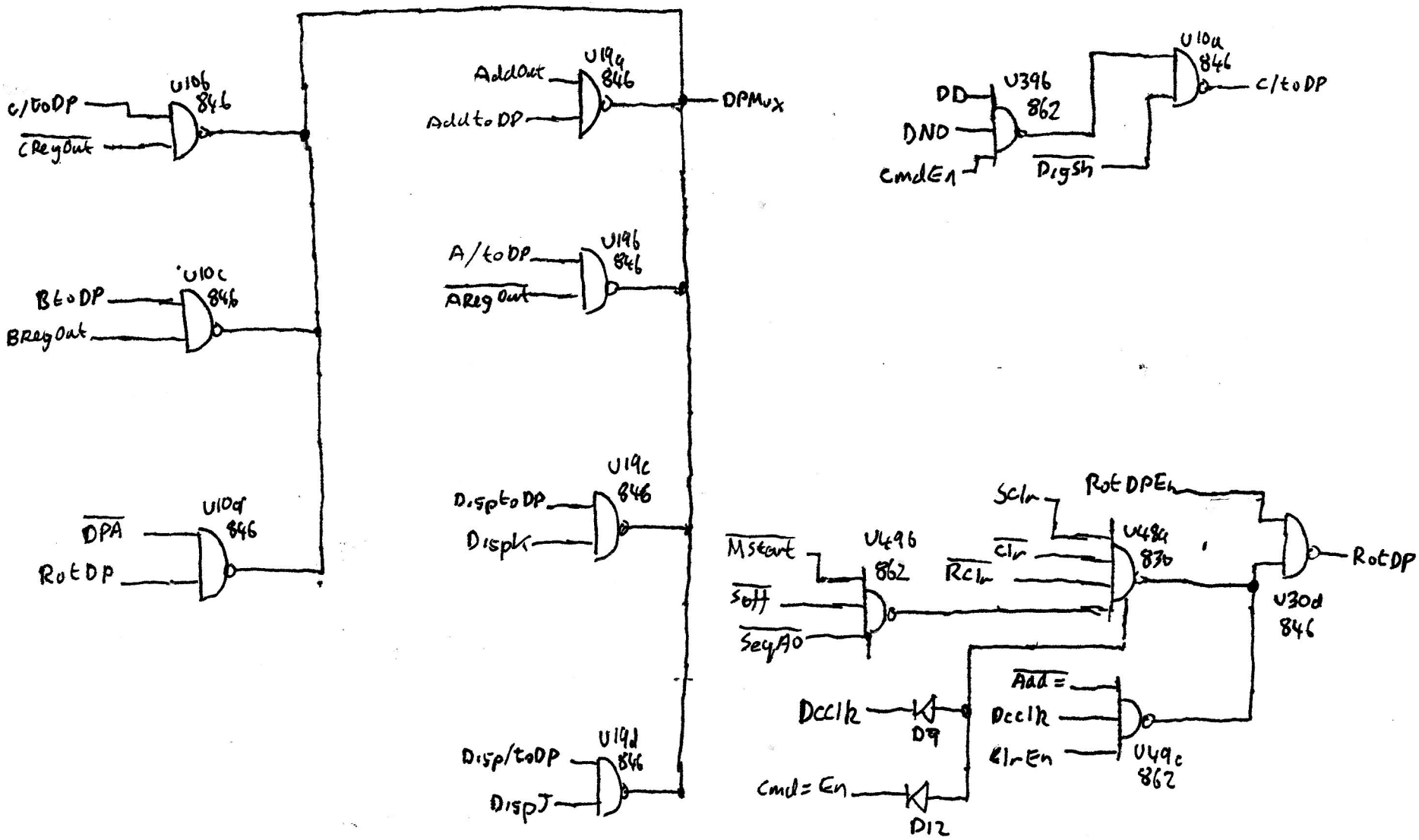

DP Multiplexer

DPMux Control

olympia ICR412 PCB 3 sheet 7

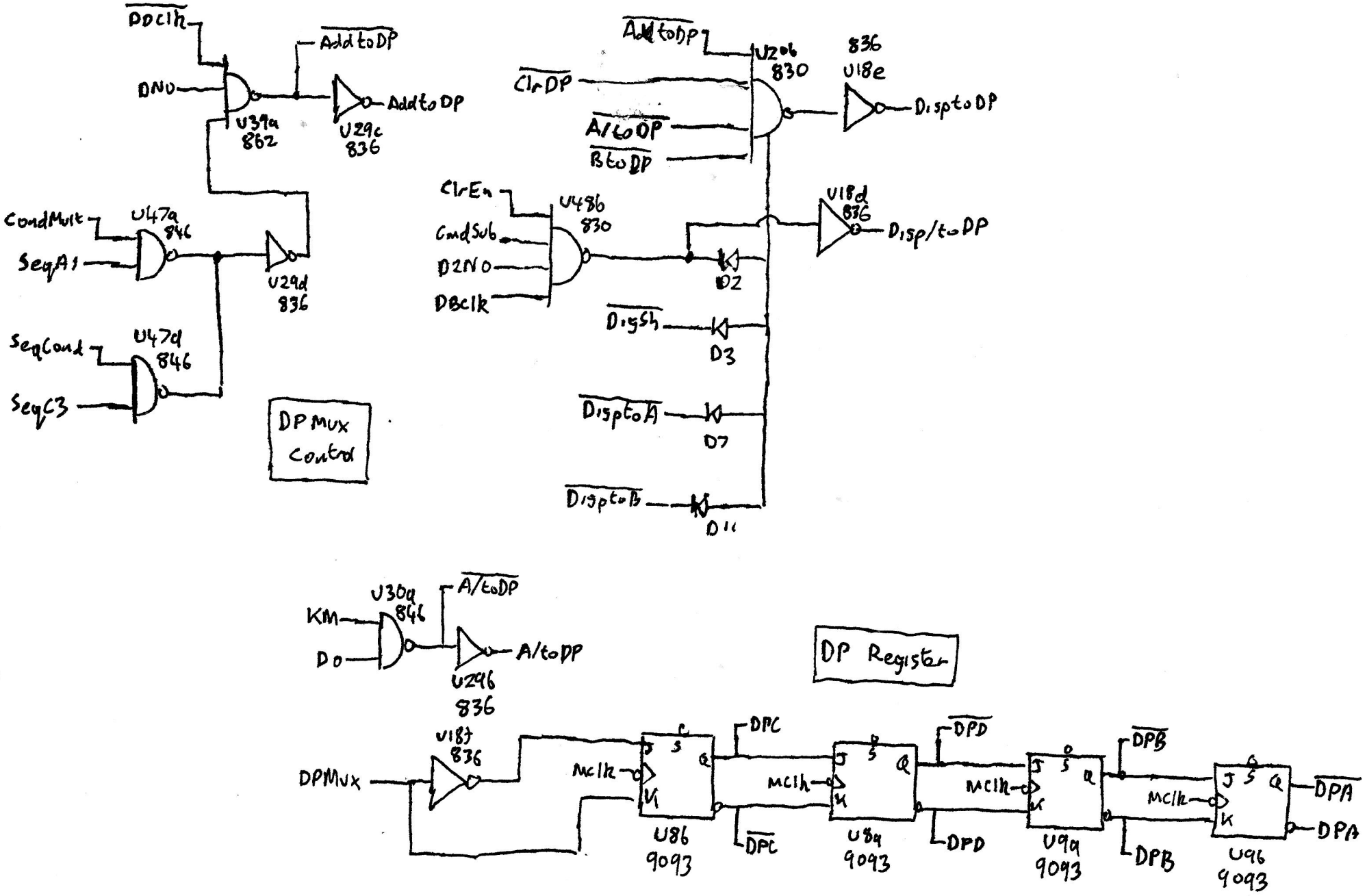

Olympia ICR412 PCB3 Sheet (8)

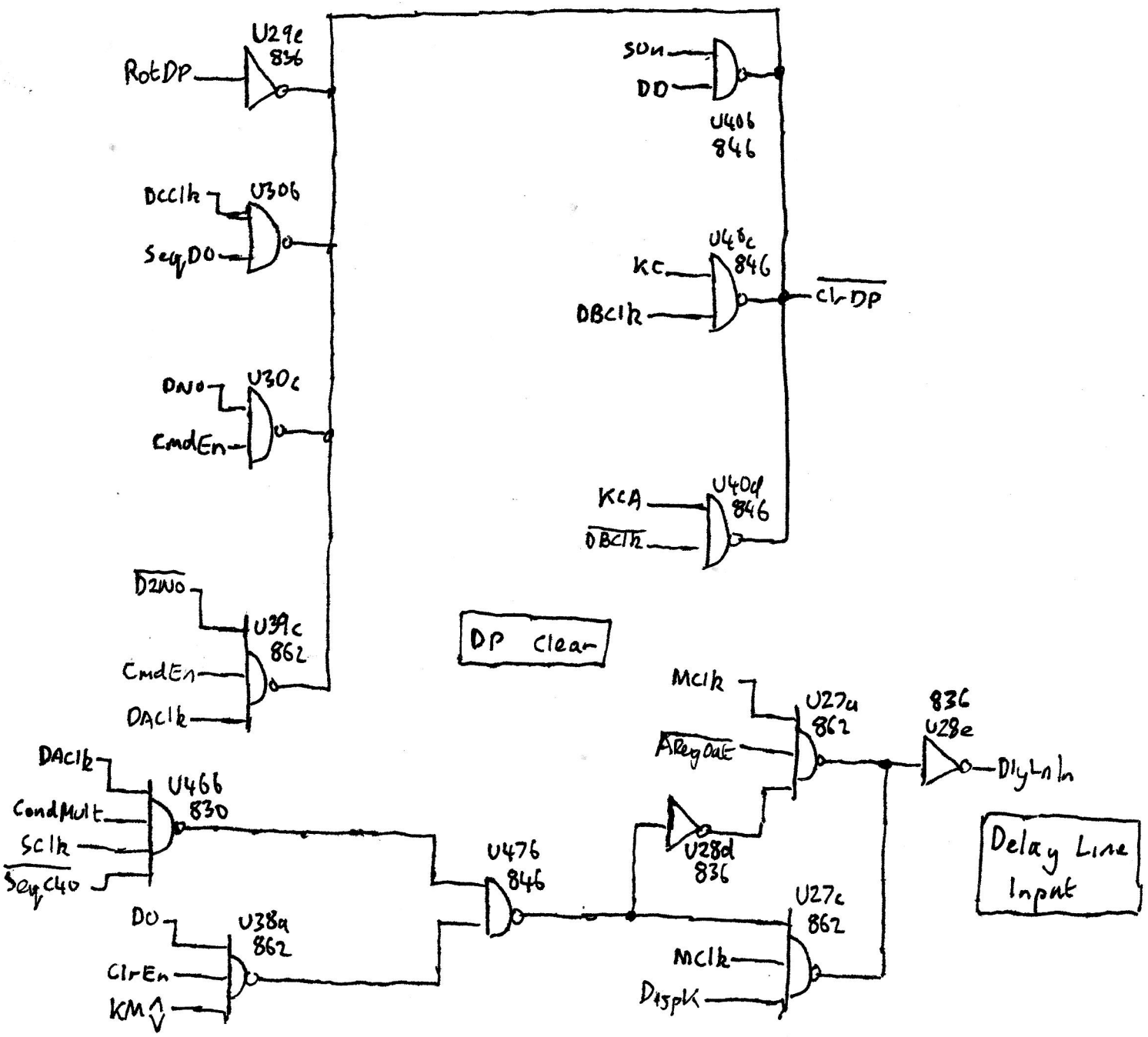

Olympia ICR412 PCB3 sheet (9)

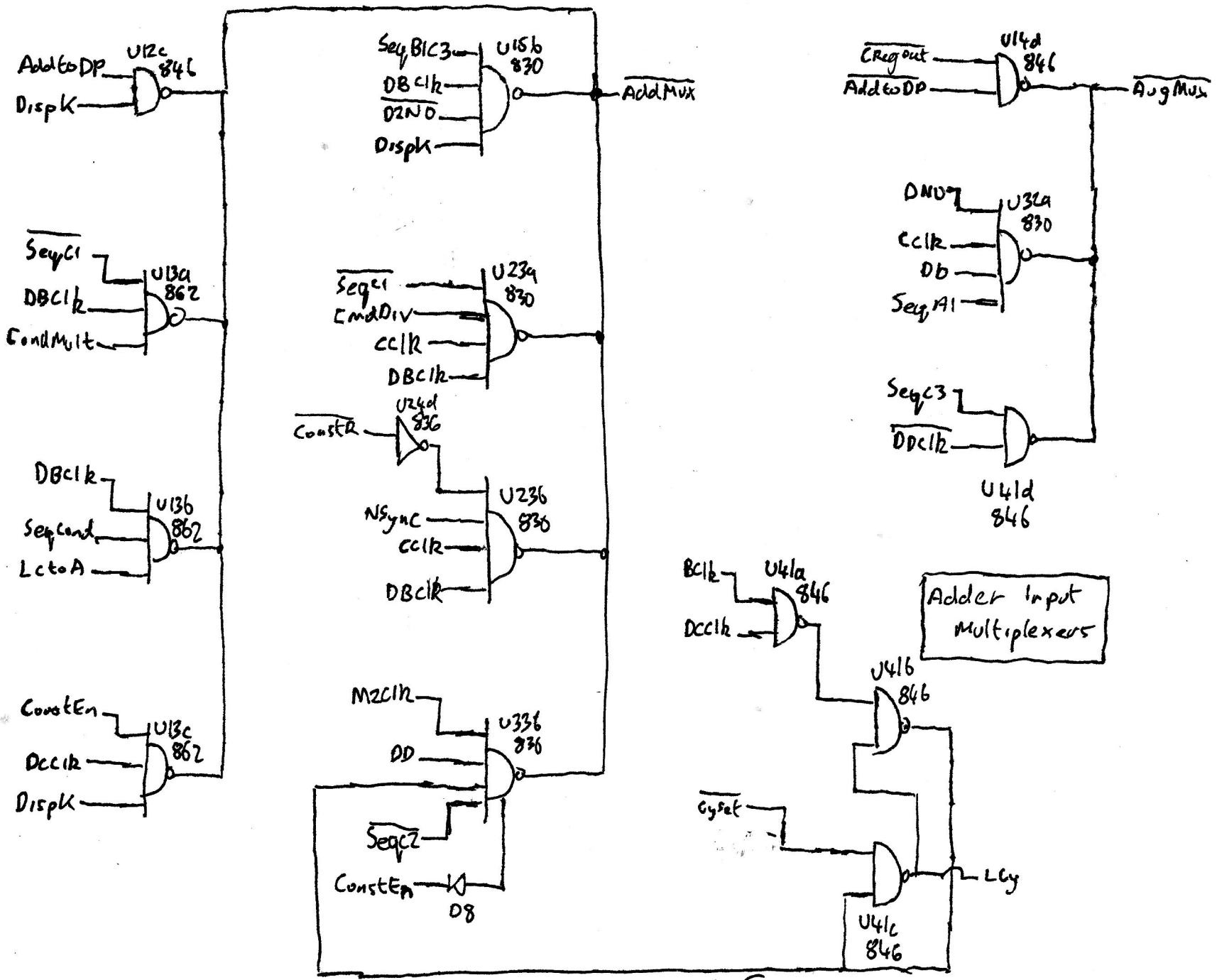
AddtoDP
DispK
U12c
846
SeqBIC3
DBClk
D2ND
DispK
U15b
830
AddMux
CRegout
AddtoDP
U14d
846
AugMux
DND
CClk
Db
SeqA1
U32a
830
SeqC1
DBClk
CondMult
U13a
862
Seq1
CmdDiv
CClk
DBClk
U23a
830
SeqC3
DDClk
U41d
846
ConstR
U24d
836
DBClk
SeqCond
LctoA
U13b
862
NSync
CClk
DBClk
U23b
830
BClk
DCClk
U41a
846
Adder Input
Multiplexers
U41b
846
ConstEn
DCClk
DispK
U13c
862
M2Clk
DD
SeqC2
ConstEn
D8
U33b
836
CySet
LCy
U41c
846

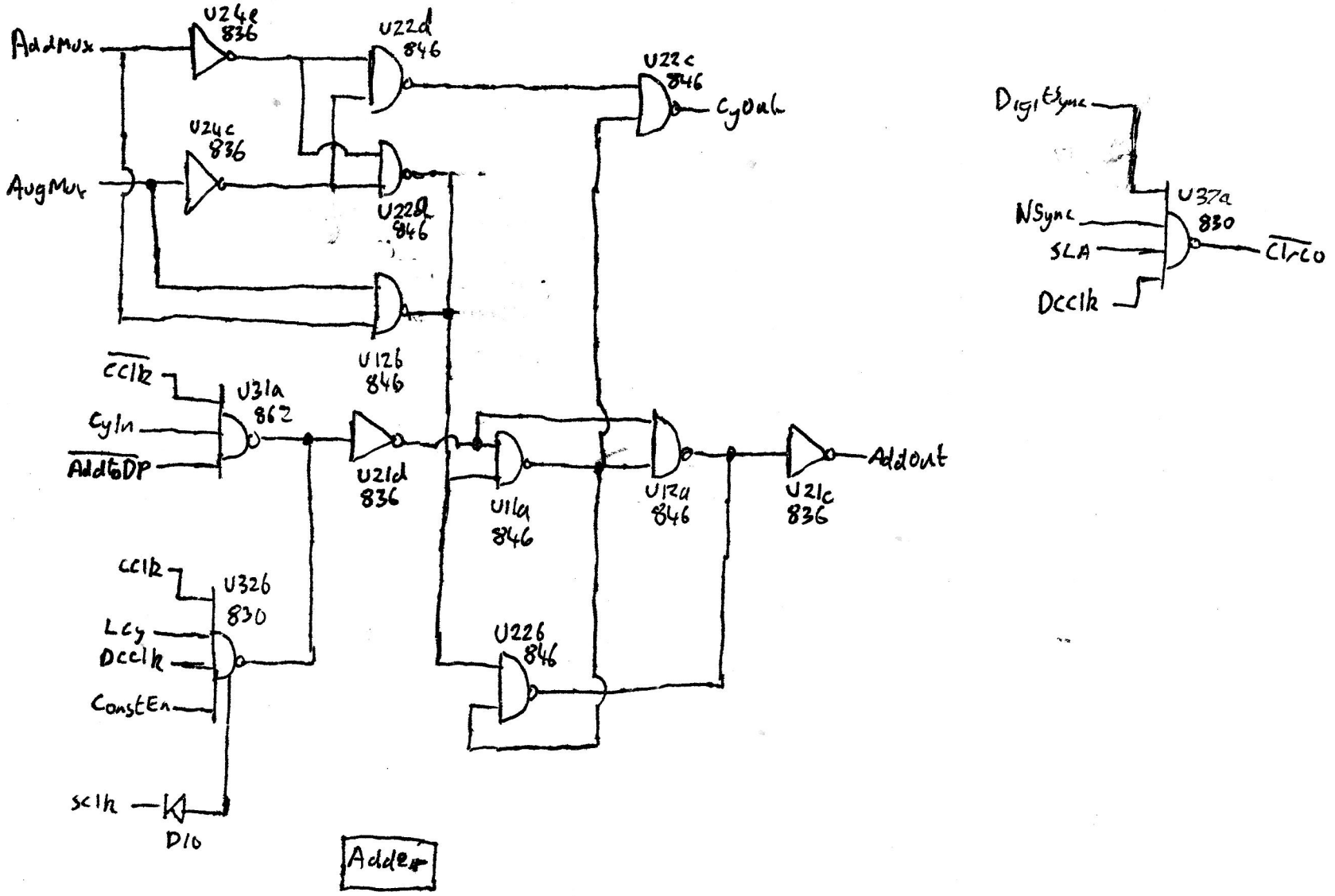

Olympia ICR412 PCB 3 Sheet (11)

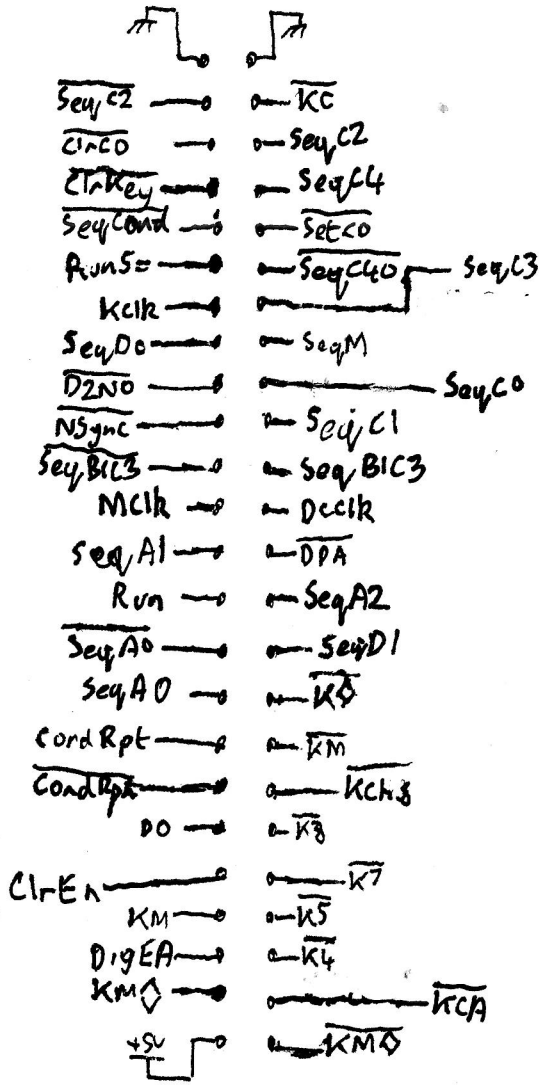

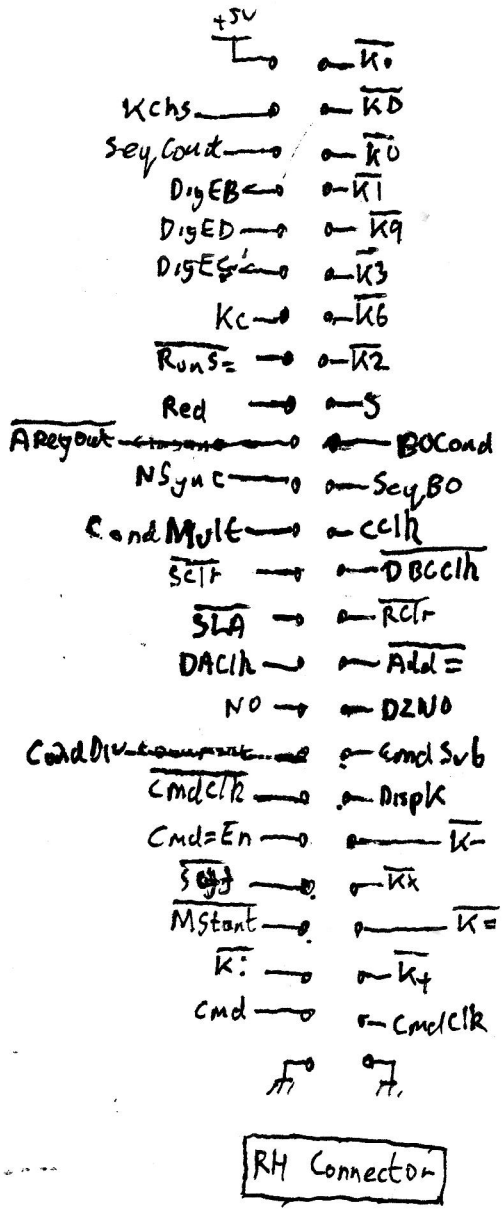

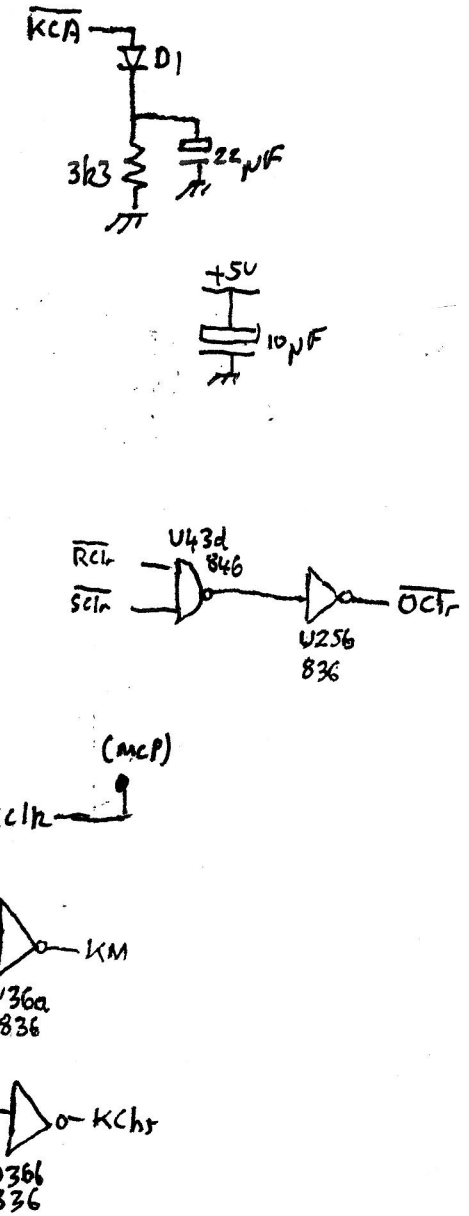

Olympia ICR412 PCB 4 Sheet (1)

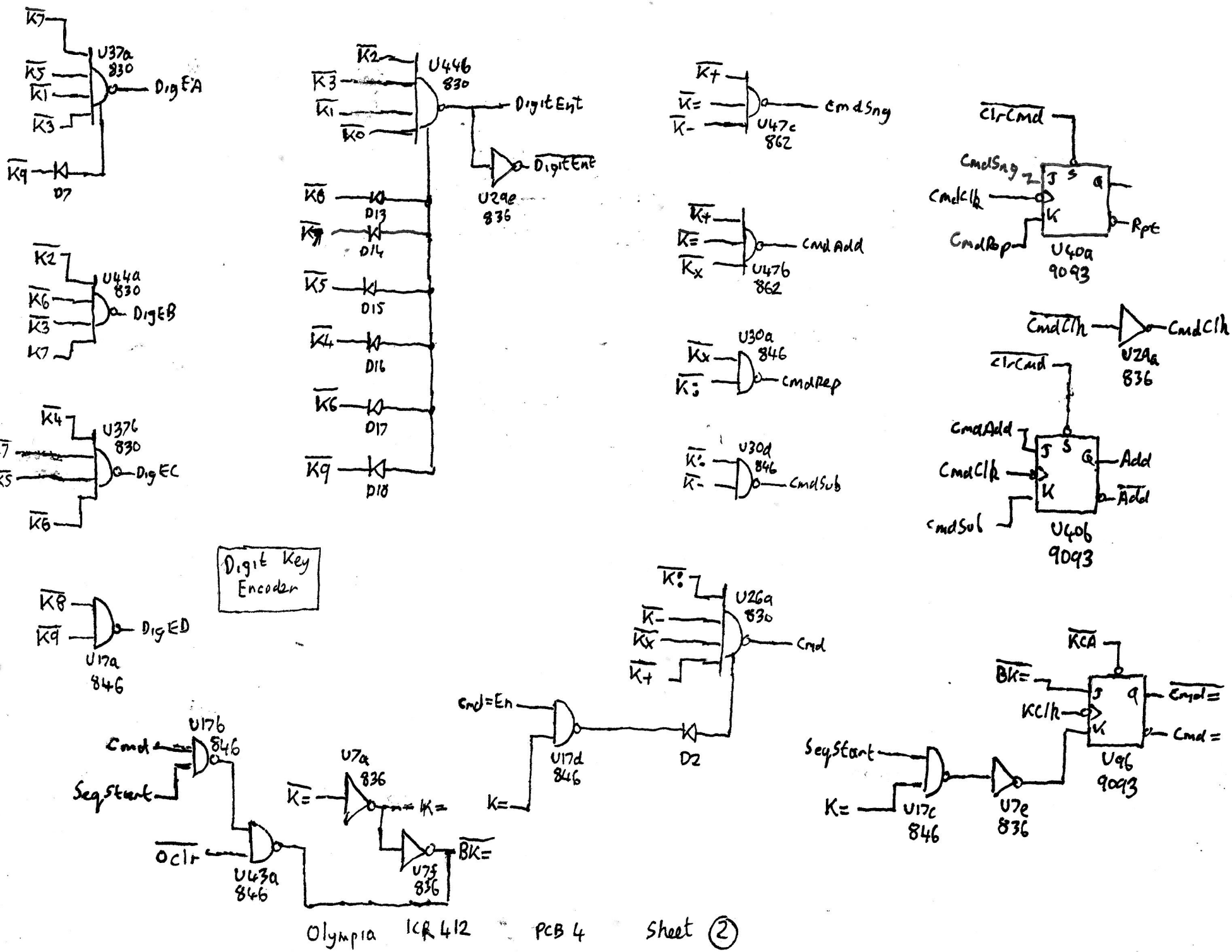
K7
K5
K1
K3
K9
U37a
830
DigEA
D7
K2
K3
K1
K0
U44b
830
DigitEnt
DigitEnt
U29e
836
K8
D13
K9
D14
K5
D15
K4
D16
K6
D17
K9
D18
K+
K=
K-
U47c
862
CmdSng
K+
K=
Kx
U47b
862
CmdAdd
Kx
K:
U30a
846
CmdRep
K:
K-
U30d
846
CmdSub
ClrCmd
CmdSng
CmdClk
K
Q
Rpt
CmdRep
U40a
9093
CmdClk
U29a
836
CmdClk
ClrCmd
CmdAdd
CmdClk
J
S
Q
Add
K
Add
CmdSub
U40b
9093
K2
K6
K3
K7
U44a
830
DigEB
K4
K7
K5
K6
U37b
830
DigEC
Digit Key Encoder
K8
K9
U17a
846
DigED
K:
K-
Kx
K+
U26a
830
Cmd
Cmd=En
U17d
846
K=
D2
U17b
846
Cmd
SeqStart
Oclr
U43a
846
K=
U7a
836
=K=
U7f
836
BK=
KCA
BK=
KClk
J
Q
Cmd=
K
Cmd=
U9b
9093
SeqStart
K=
U17c
846
U7e
836
Olympia ICR 412 PCB 4 Sheet (2)

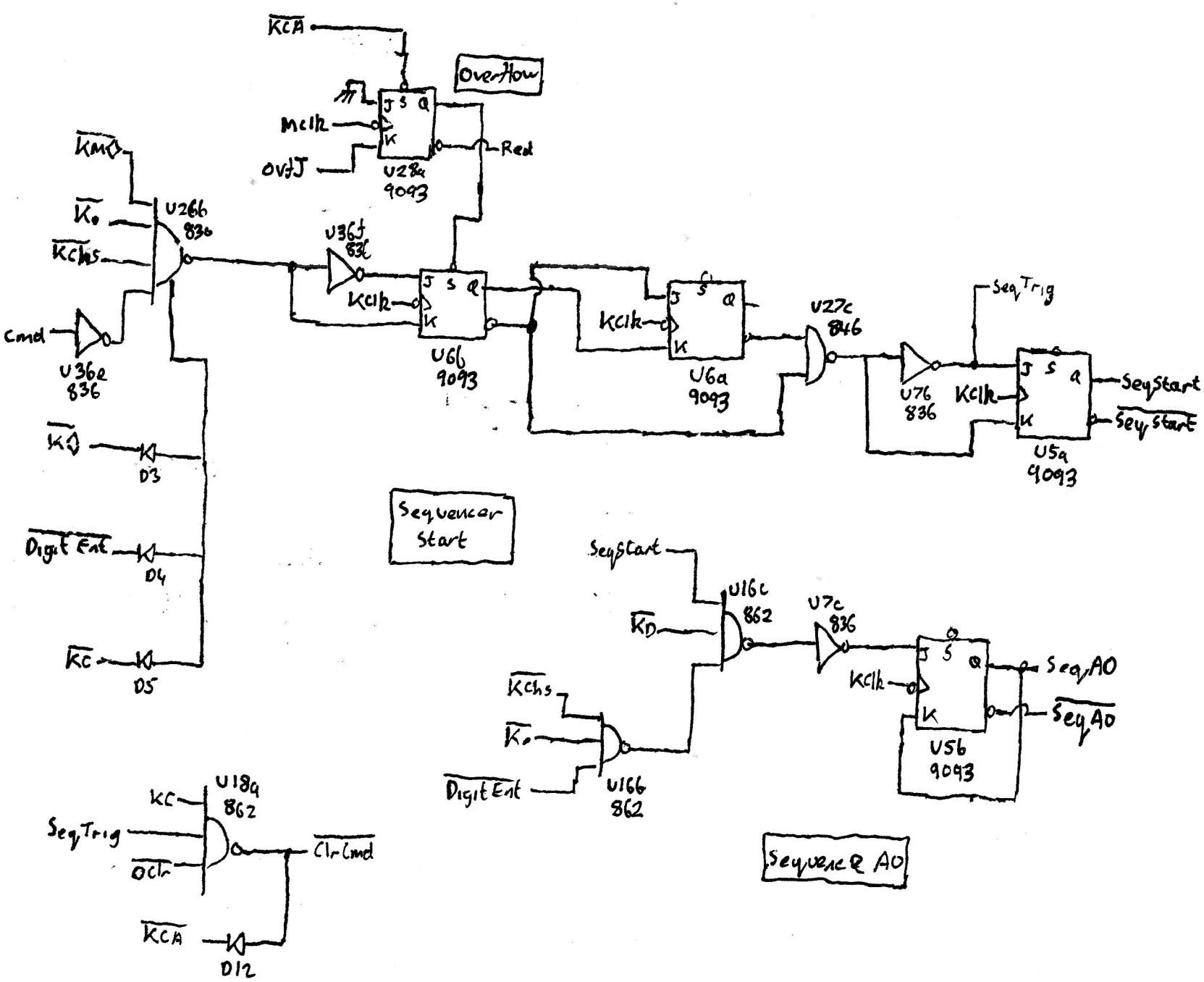

Olympia ICR412 PCB 4 Sheet (3)

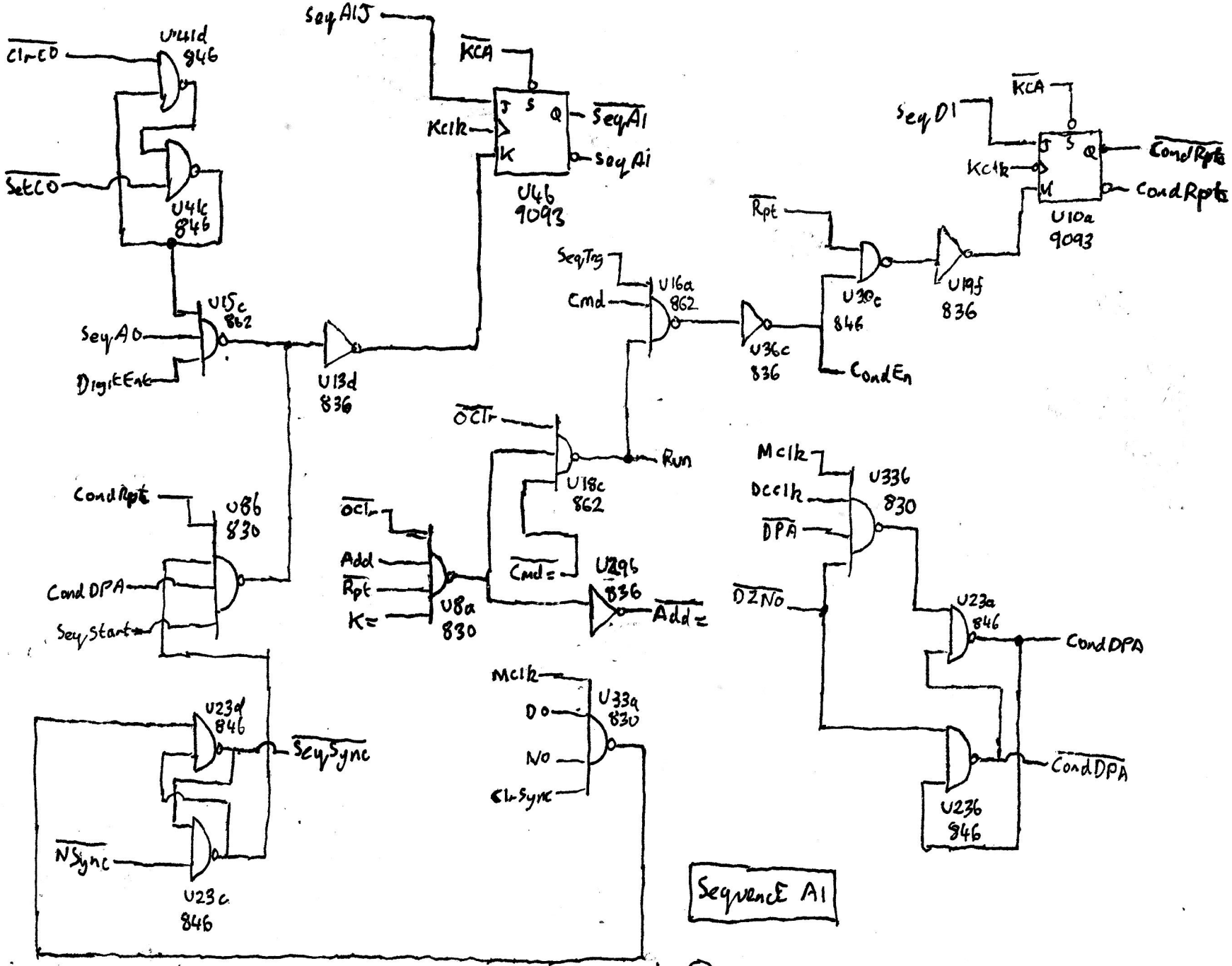
SeqAIJ
KCA
ClrCO
U41d
946
SetCO
U46c
846
Kclk
J S Q
K
SeqAI
SeqAi
U46
9093
U15c
862
SeqA0
DigitEnb
U13d
836
SeqTrg
Cmd
U16a
862
U36c
836
Rpt
U30c
846
U19f
836
SeqD1
KCA
Kclk
J S Q
M
CondRpt
CondRpt
U10a
9093
CondEn
OCTr
U18c
862
Run
CondRpt
U86
830
CondDPA
SeqStart
OCT=
Add
Rpt
K=
U8a
830
Cmd=
U29b
836
Add=
Mclk
Dcclk
DPA
U33b
830
D2N0
U23a
846
CondDPA
CondDPA
U23b
846
U23d
846
SeqSync
NSync
Mclk
D0
N0
Clr Sync
U33a
830
SequencE A1

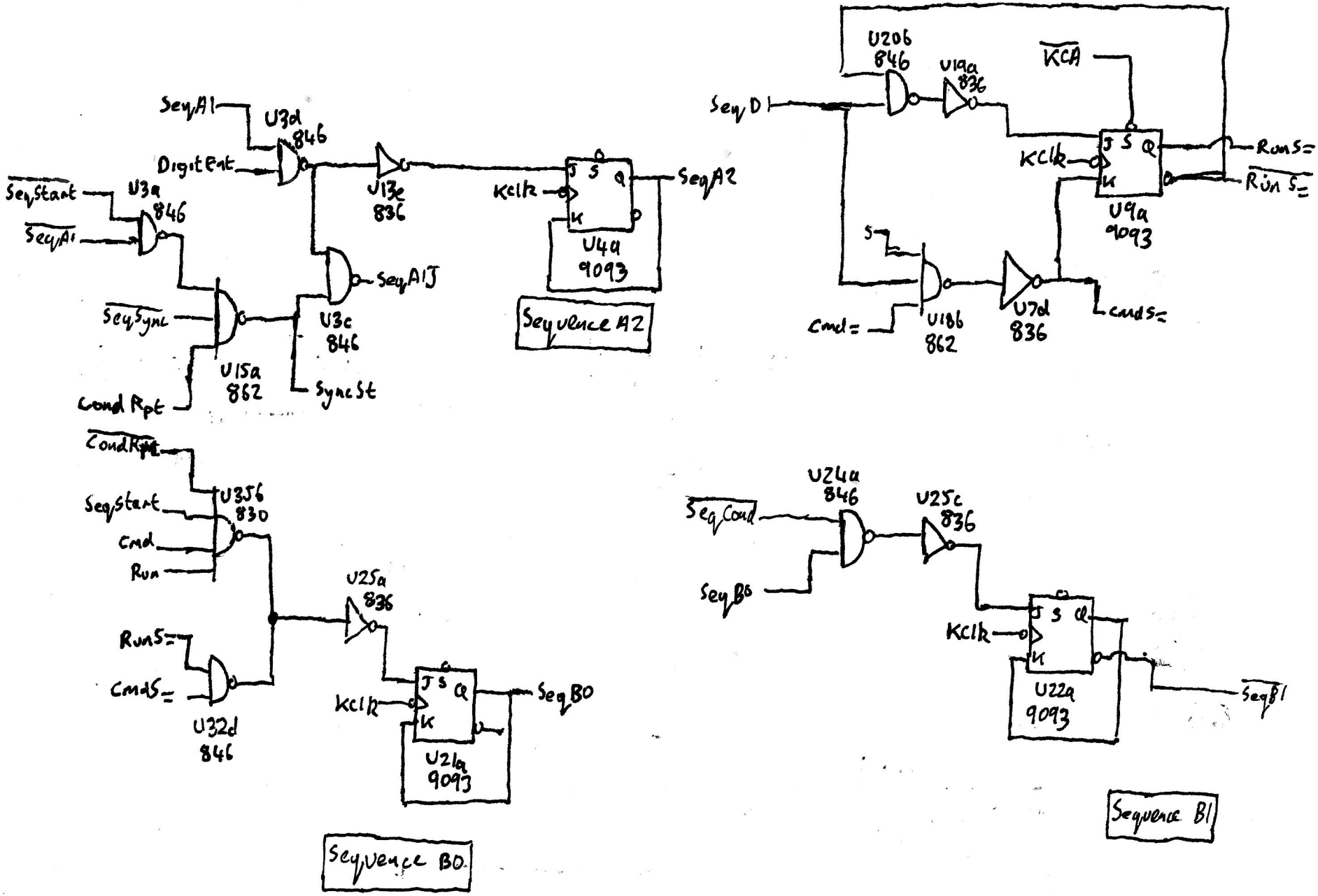

Otympia ICR412 PcB4 Sheet (5)

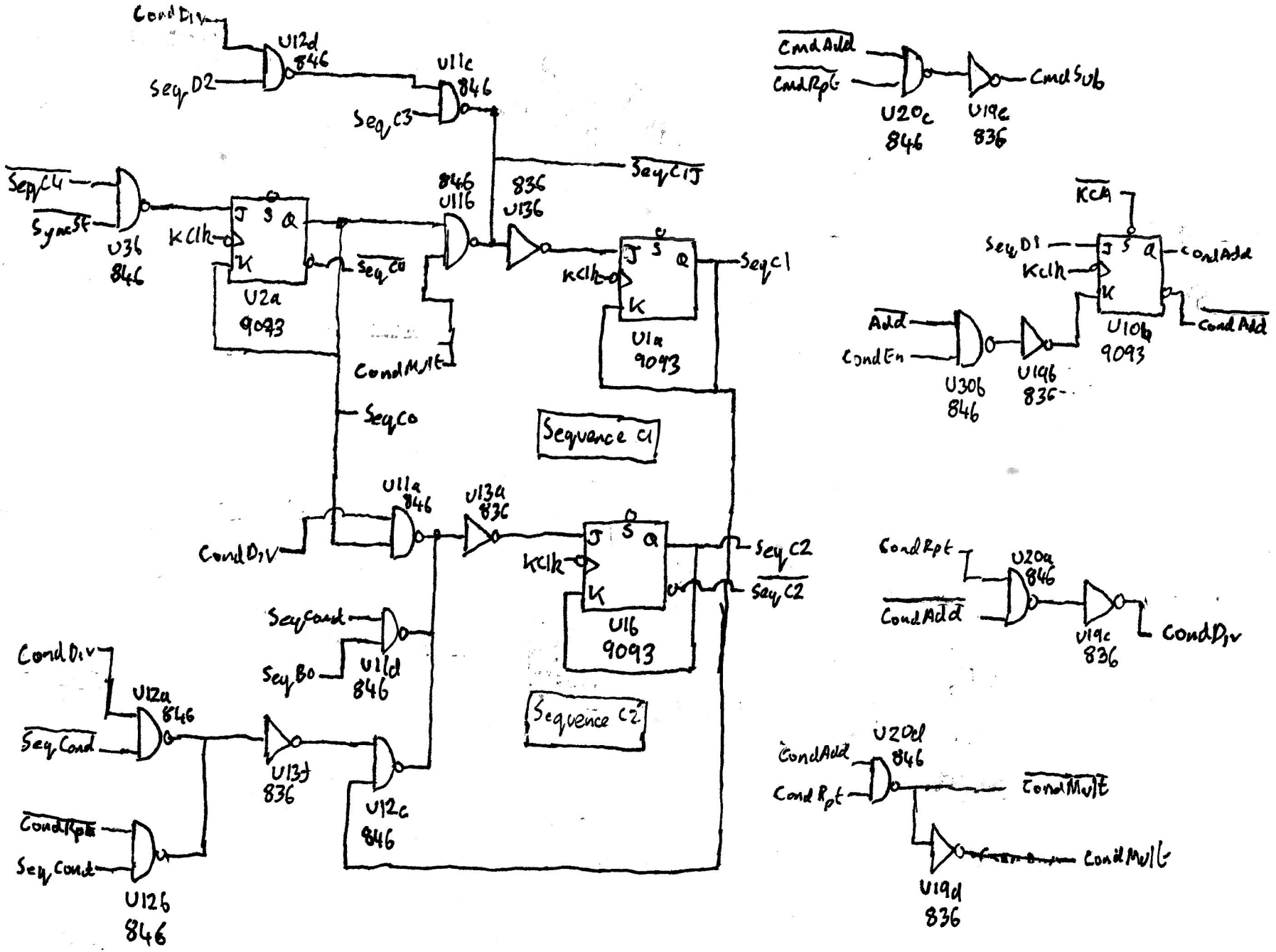

Olympia ICR412 PCB4 Sheet (6)

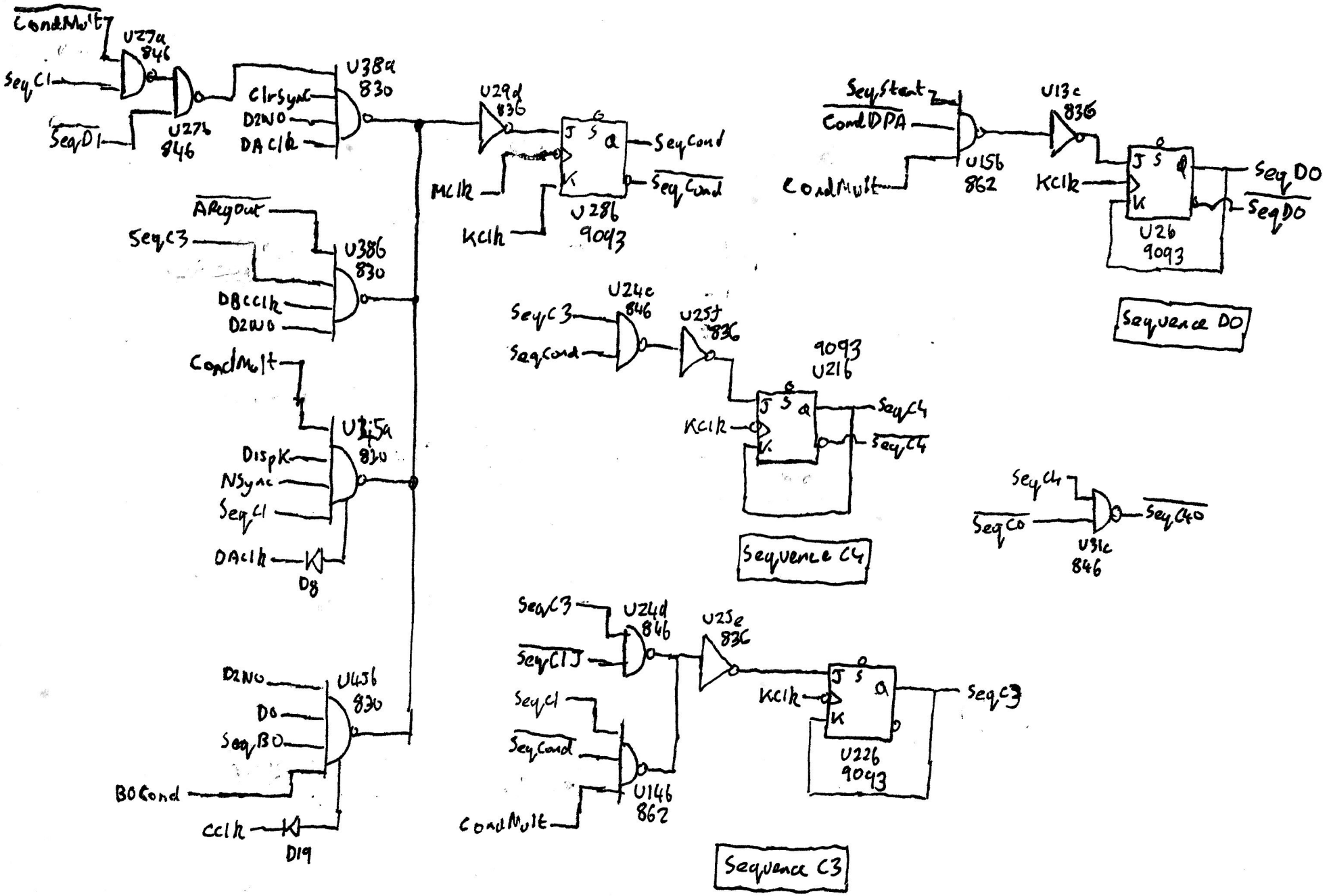

Olympia ICR412 PCB4 Sheet (7)

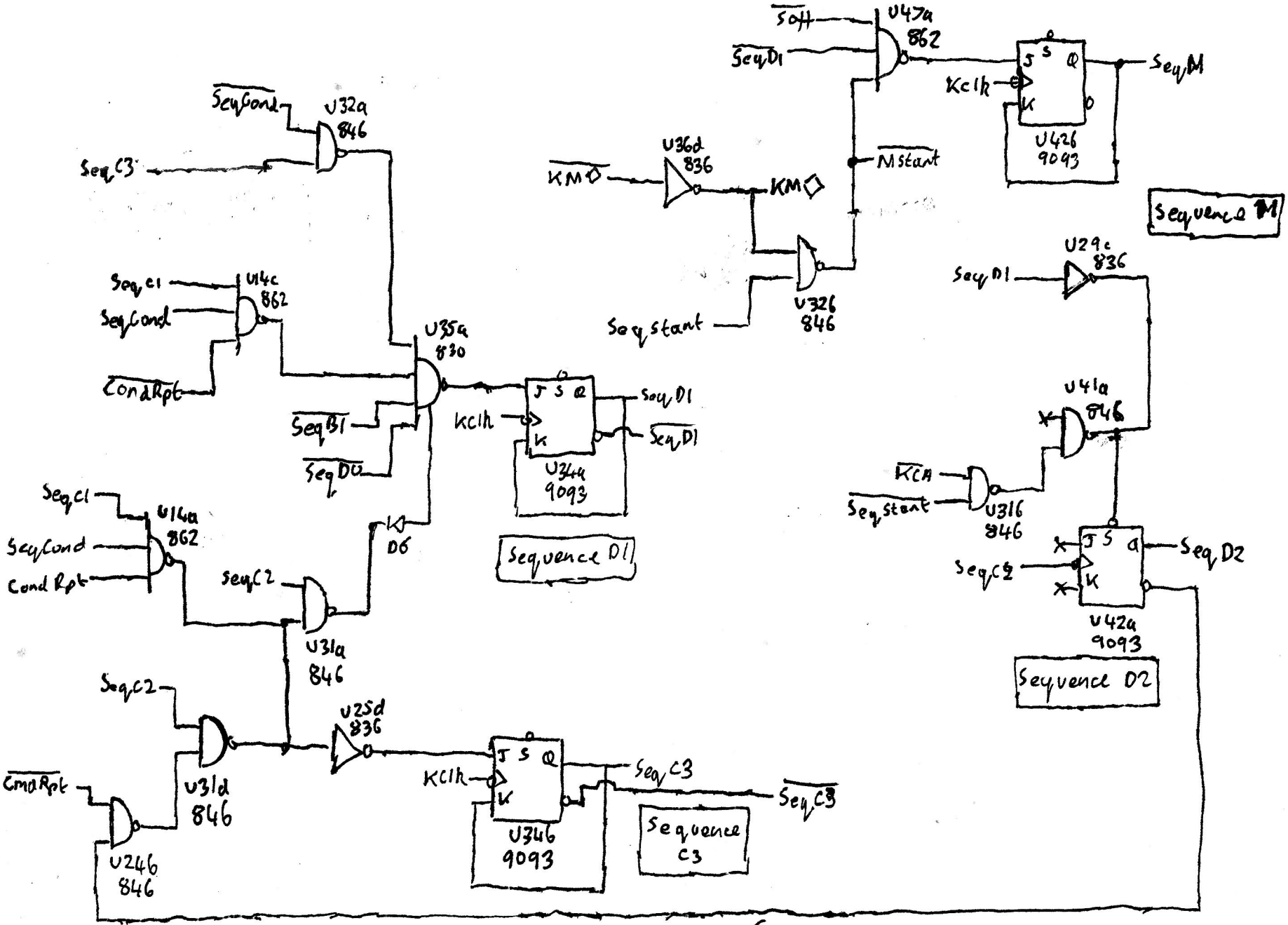

Olympia ICR412 PCB4 Sheet (8)

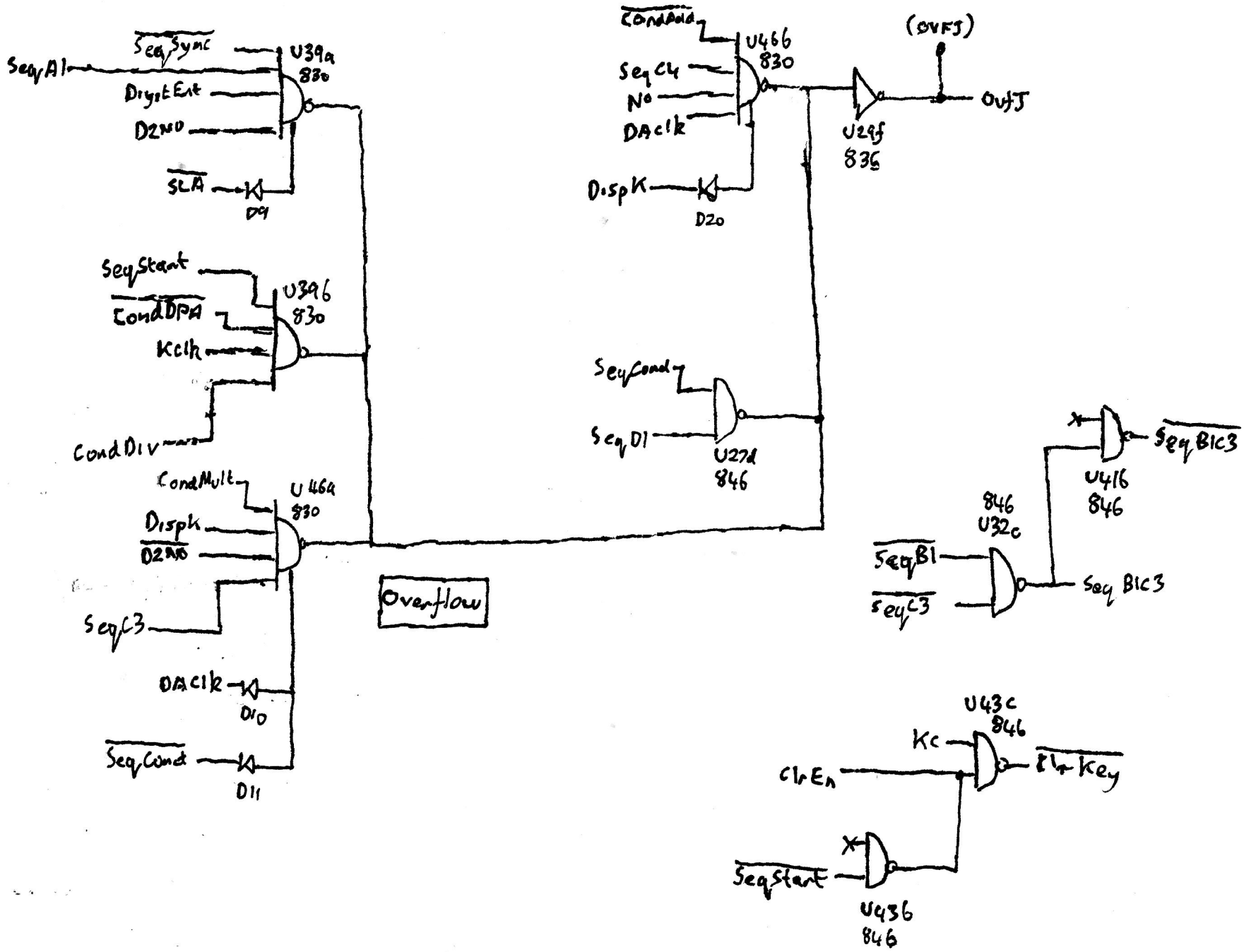

Olympia ICR412 PCB 4 Sheet (9)

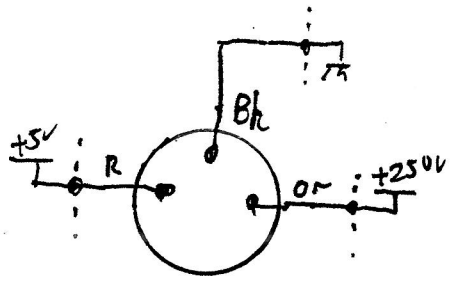

PSU

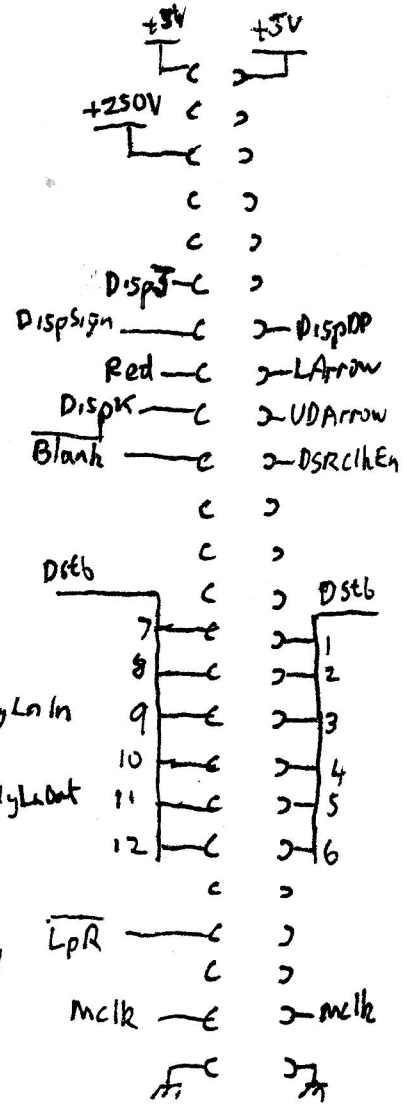

PCB1
(Display)

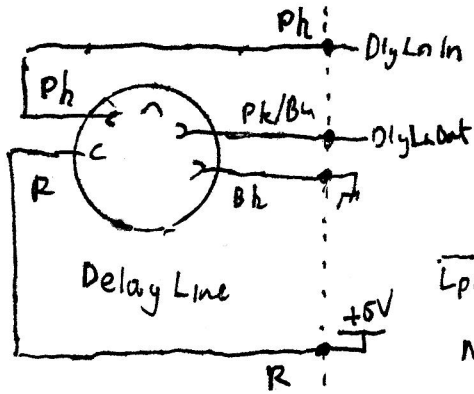

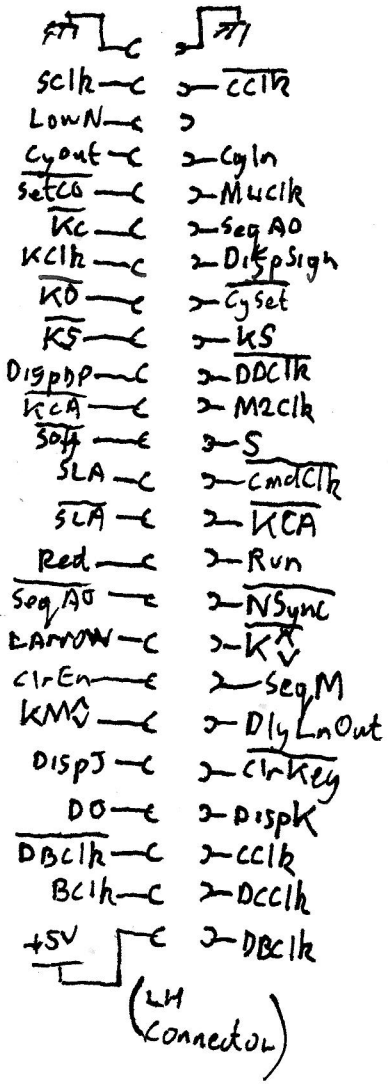

PCB2
(Timing)

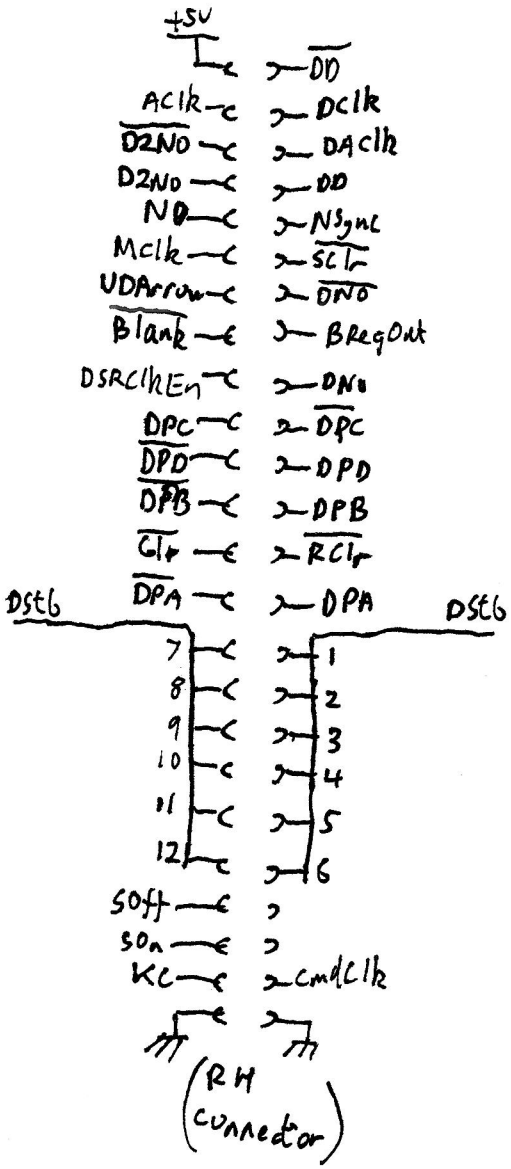

olympia ICR412 Backplane Sheet (1)

Olympia ICR412 Backplane Sheet ②

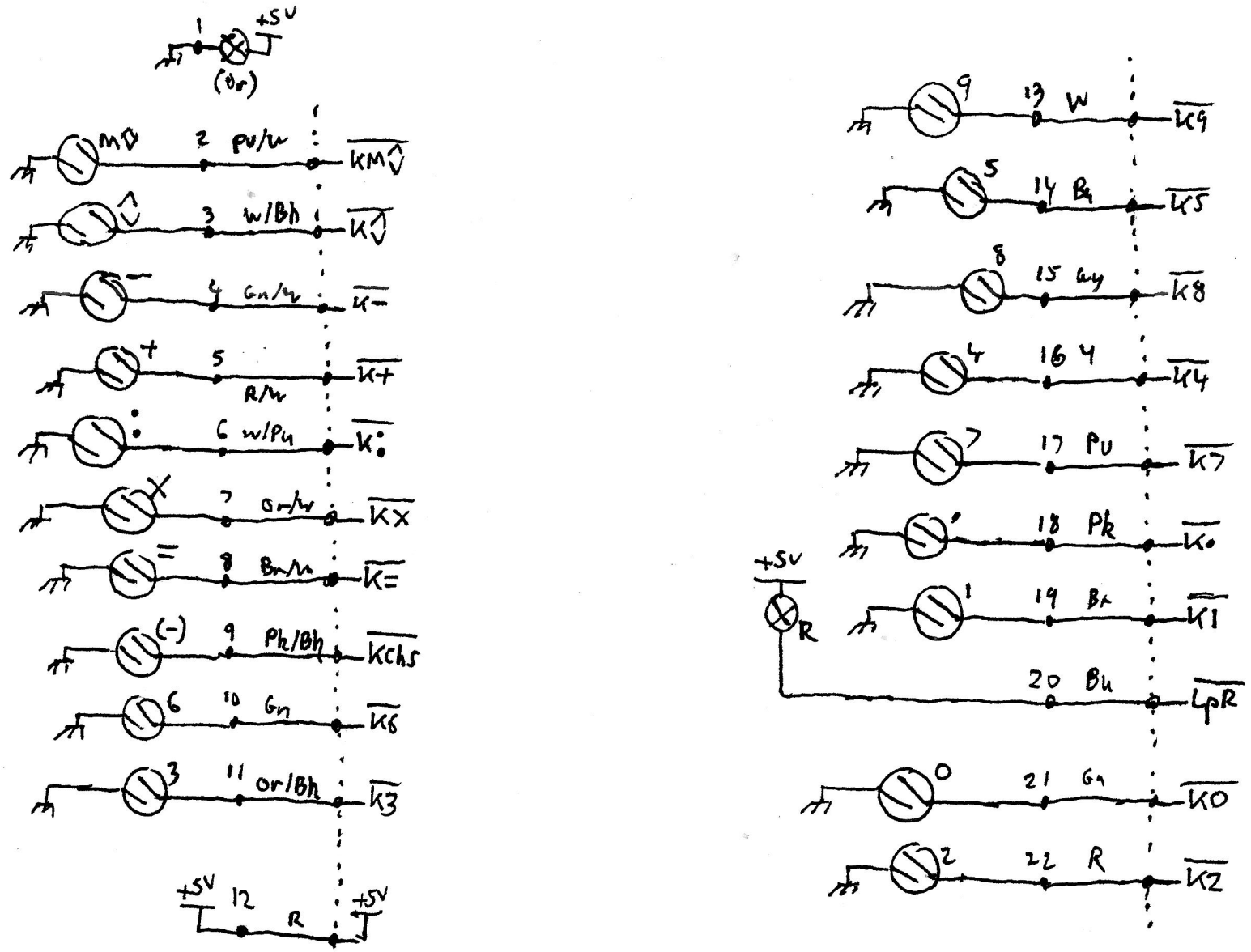

Olympia ICR412 Keyboard (and Wiring) Sheet (1)

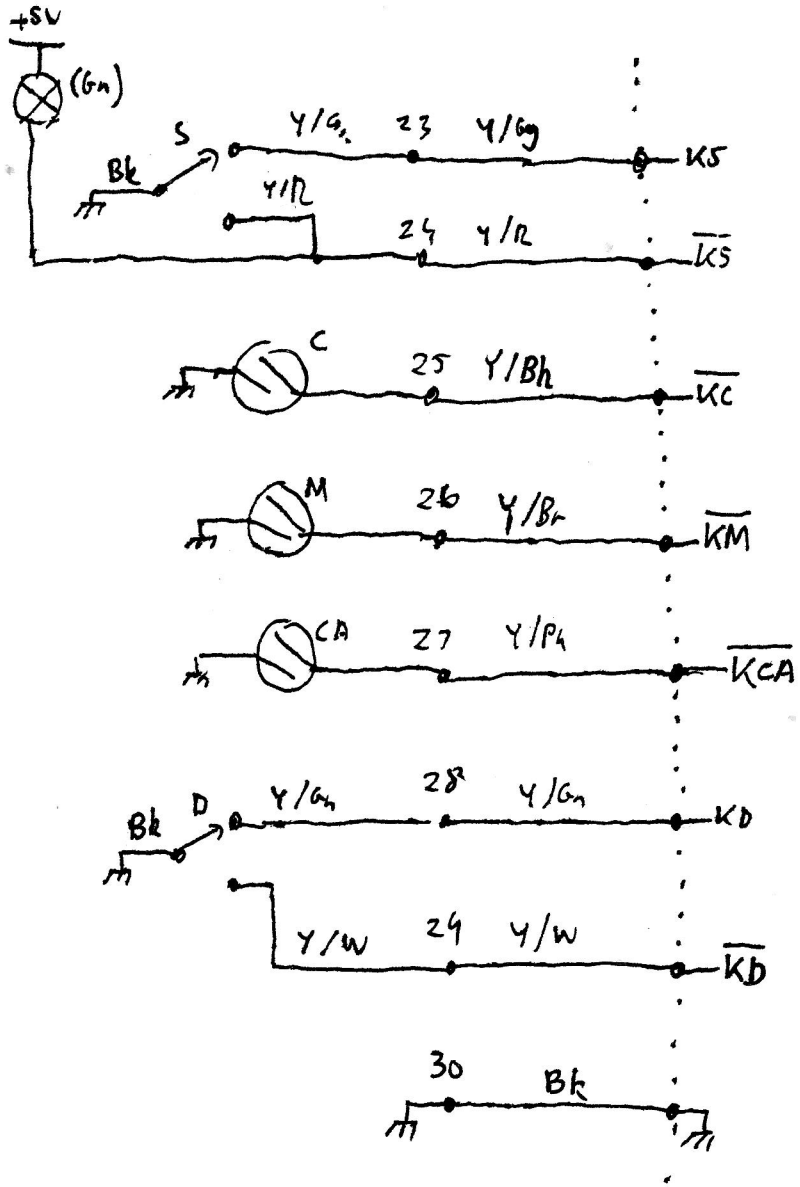

Olympia ICR412 Keyboard (+Wiring) Sheet (2)

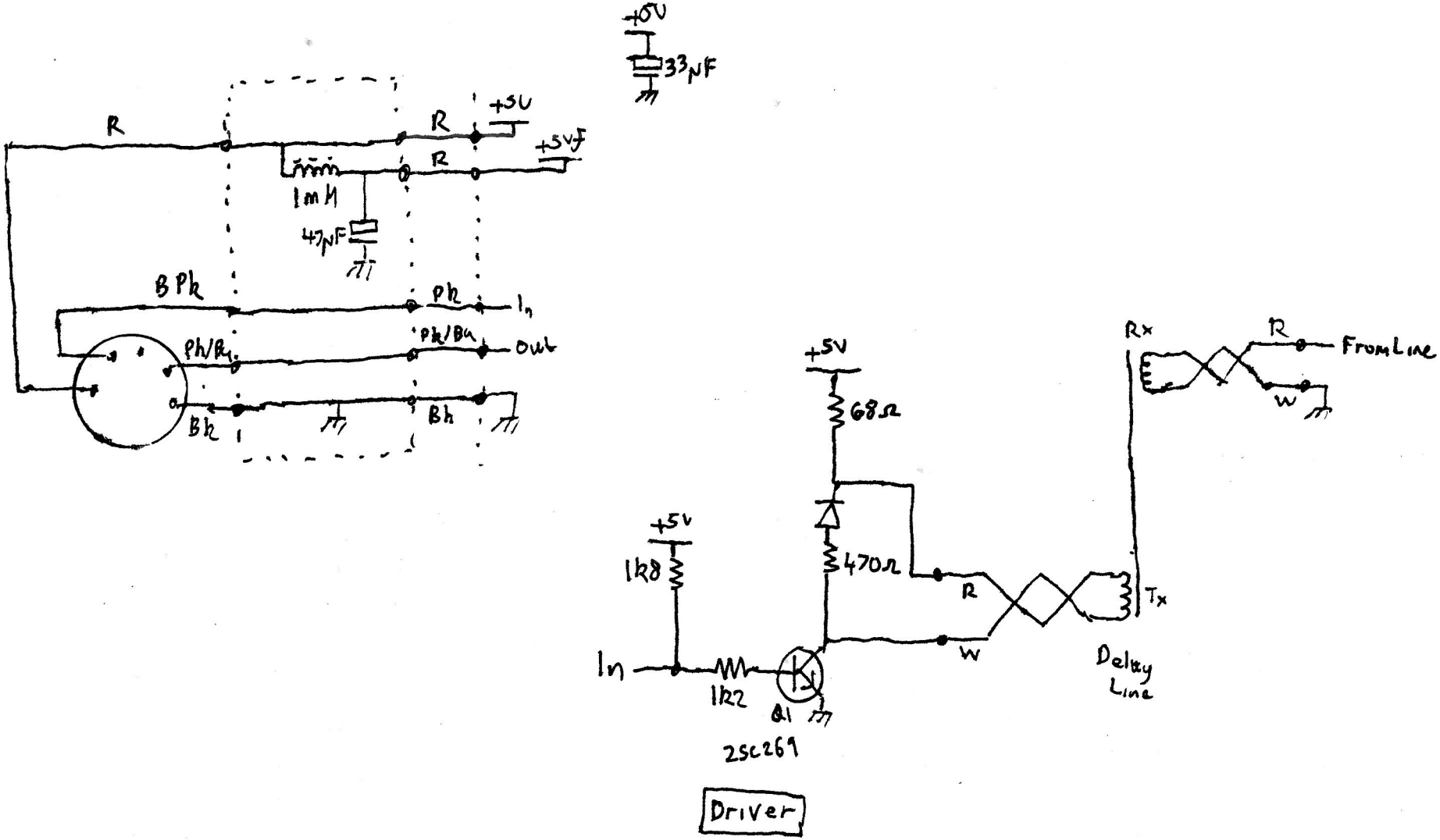

Olympia ICR412 Delay Line sheet (1)

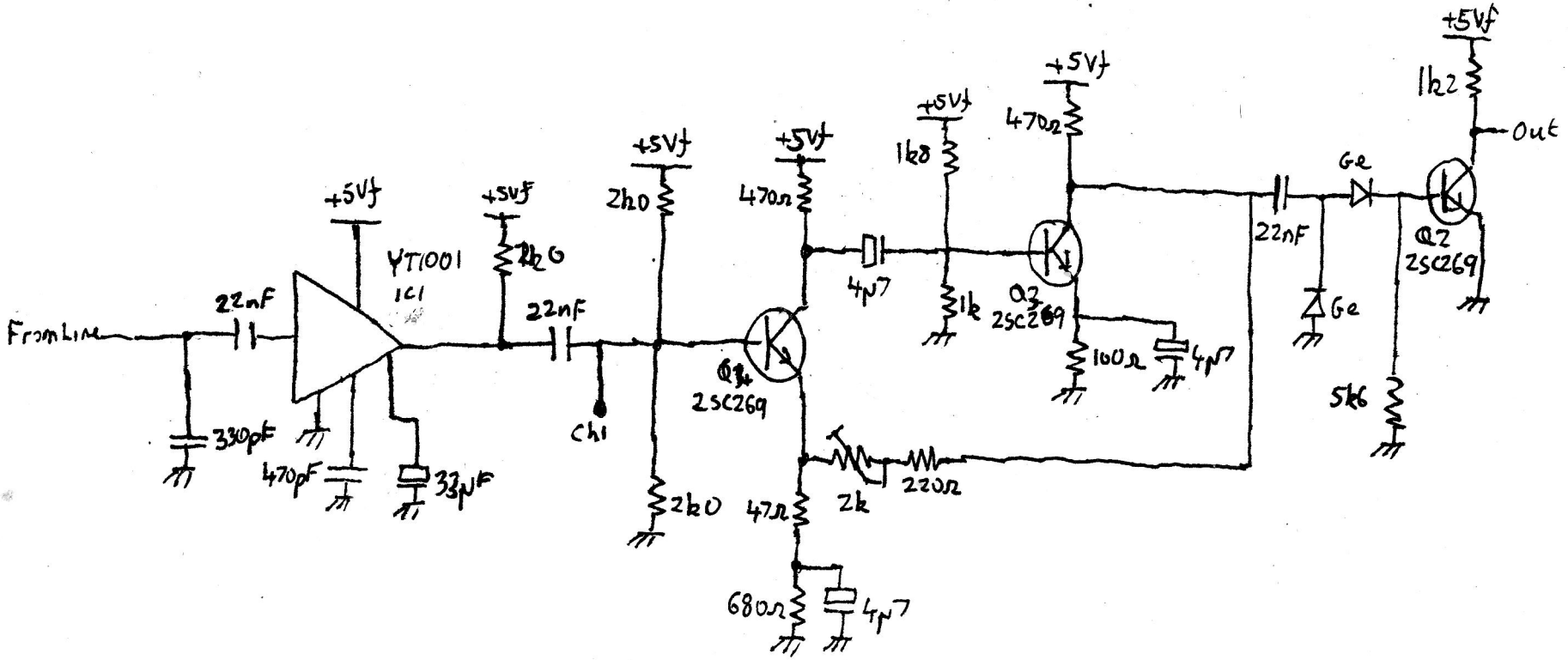

Sense Amplifier

Olympia ICR412 Delay Line Sheet (2)

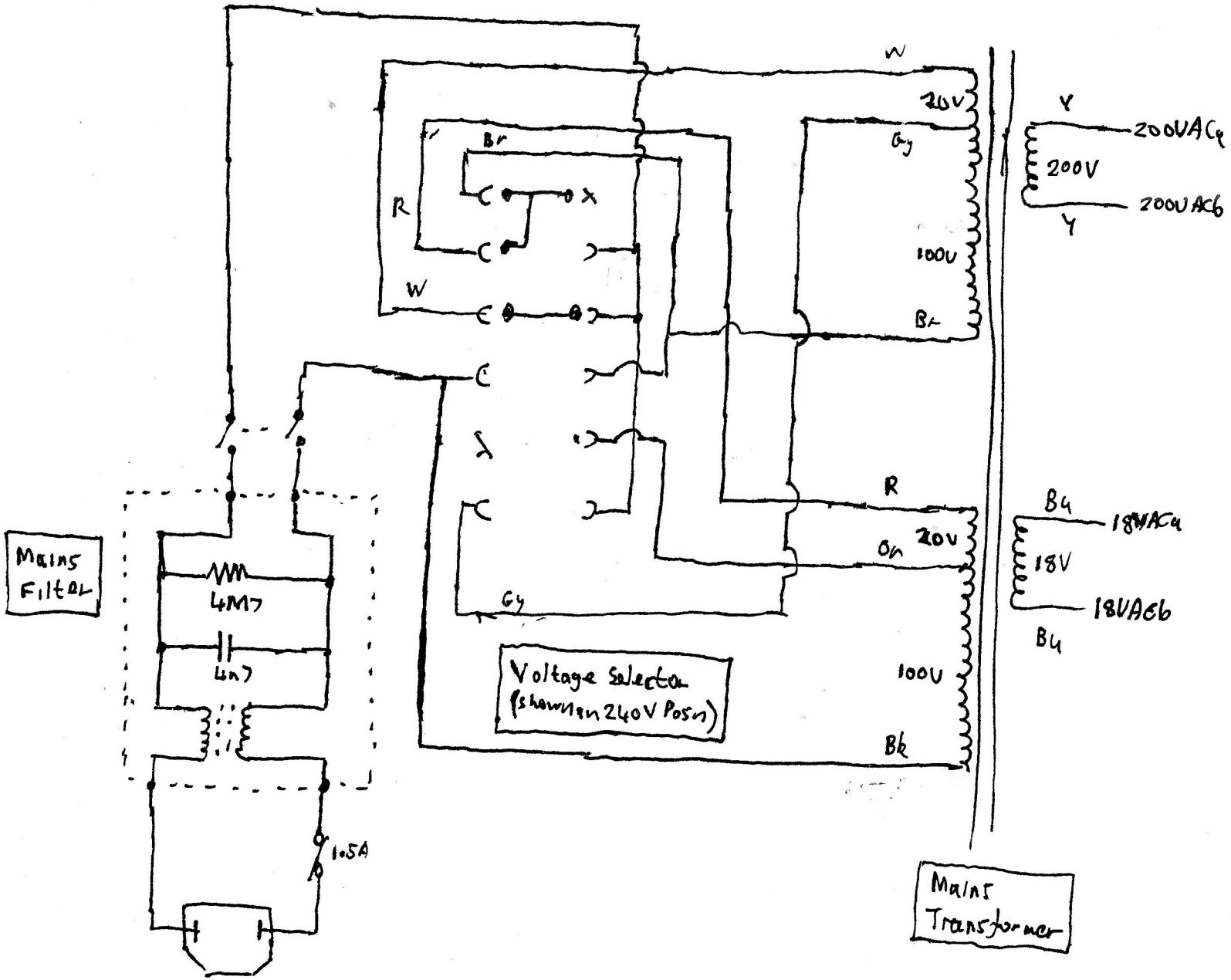

Olympia ICR412 PSU Sheet ①

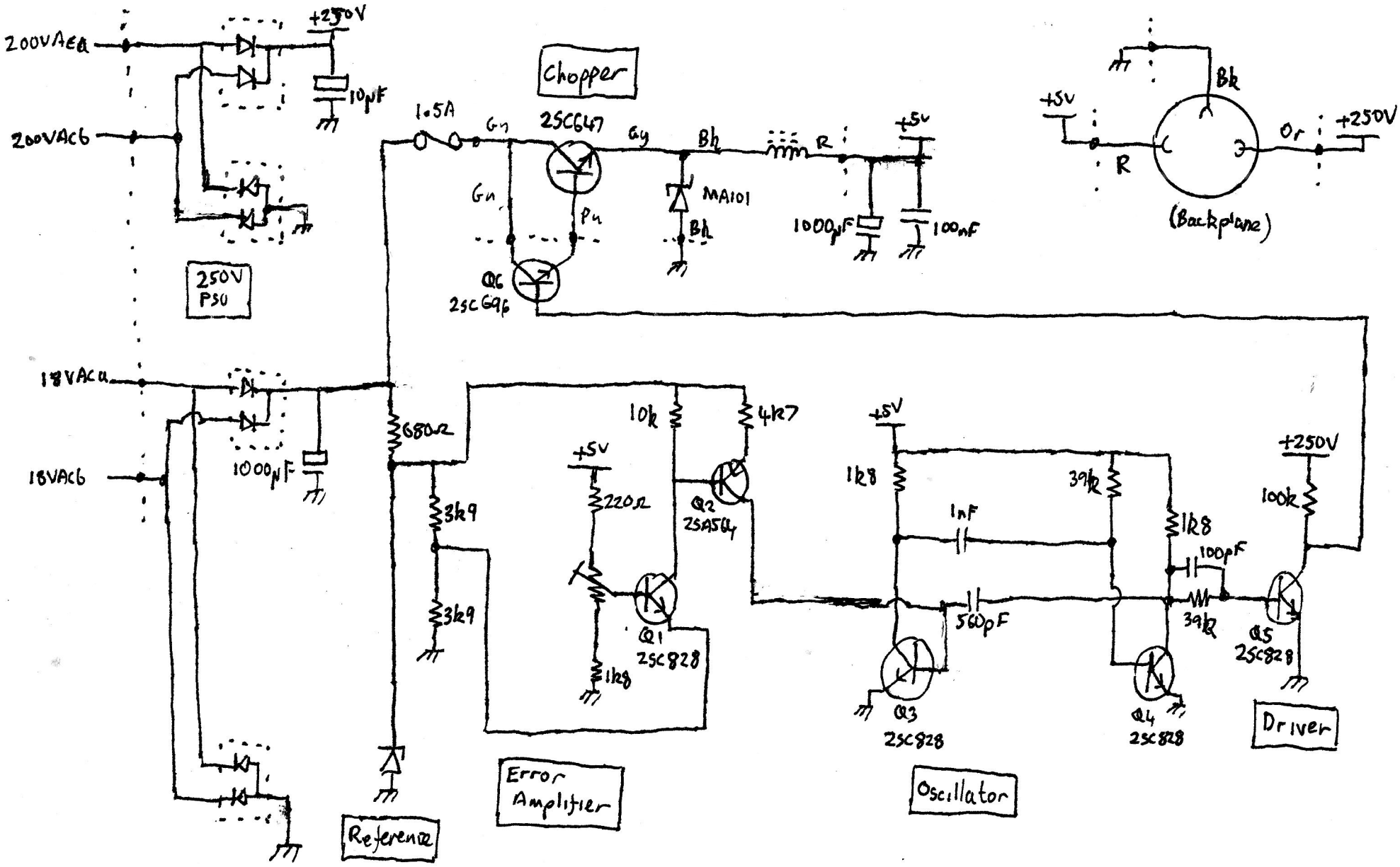

Olympia ICR412 PSU Sheet ②

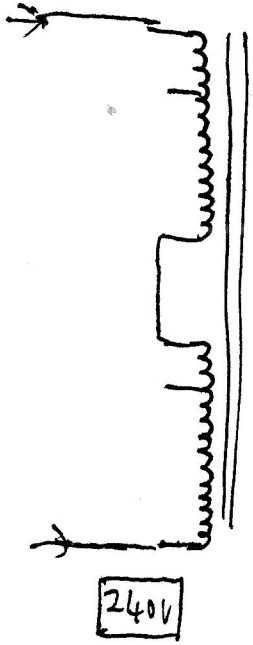

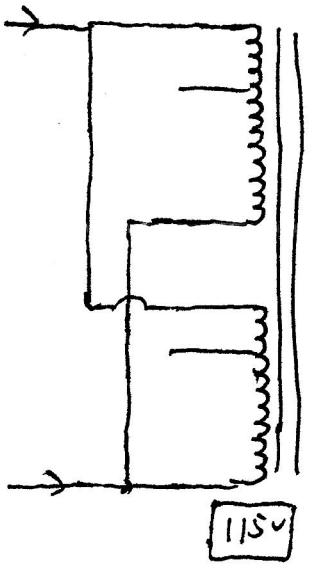

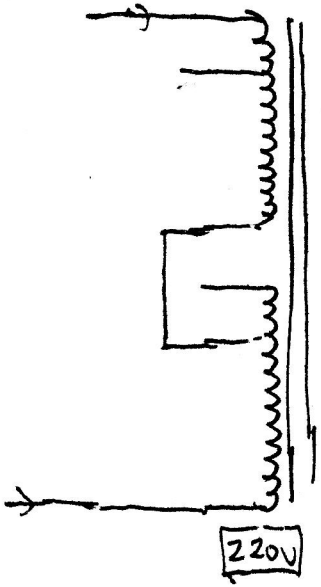

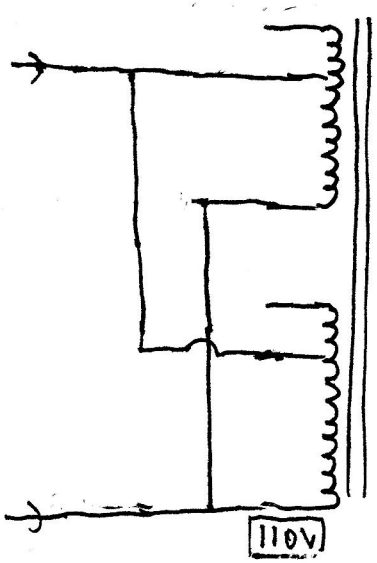

Olympia ICR412

Voltage Selector